RC10 L3 TOURING

1:10 SCALE COMPETITION ELECTRIC KITS

- Use this exploded view of the RC10L3 touring car kits to find the part number. Then look up its number in the catalog portion on the reverse for details.
- An asterisk (*) next to a number indicates that a **Factory Team** option is available.
- Not all parts are drawn to scale.
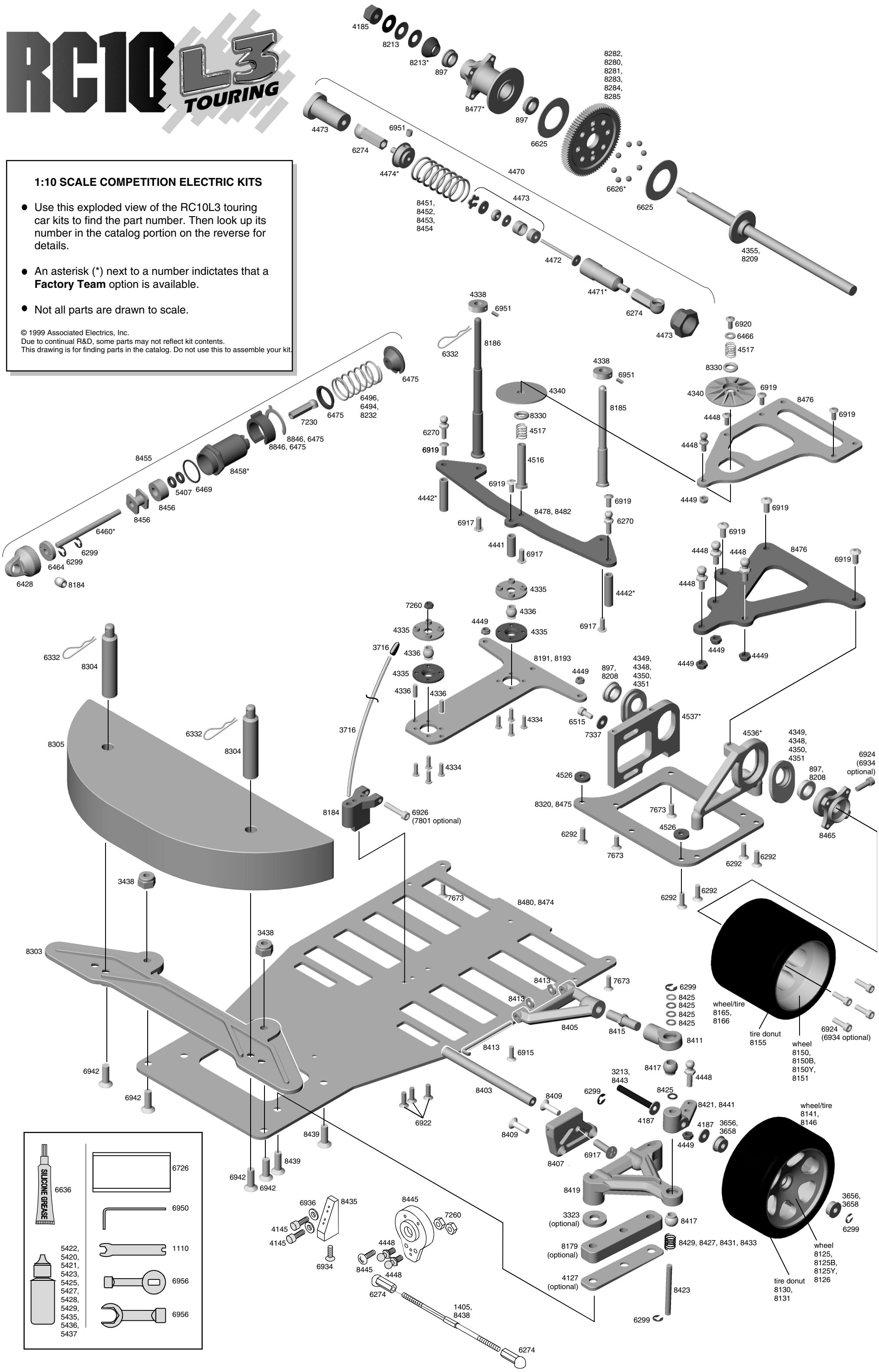
© 1999 Associated Electrics, Inc.
Due to continual R&D, some parts may not reflect kit contents.
This drawing is for finding parts in the catalog. Do not use this to assemble your kit.