RC8T

1:8 Scale Nitro 4WD Offroad Truggy Kit

80910: RC8T Factory Team Kit (FT)
80915: RC8T Ready -To-Run (RTR)

1:8 Scale Nitro 4WD Offroad Truggy Kit Manual

TEAM ASSOCIATED

:: Introduction

Thank you for purchasing this Team Associated product. This manual contains instructions and tips for building and maintaining your new RC8T / RC8T RTR. Please take a moment to read through it and familiarize yourself with these steps.

:: RC8T Features

:: Factory Team RC8T

- Factory assembled shocks, diffs and turnbuckles.
- Factory Team shock and diff fluids included.
- Factory Team "Big Bore" threaded, hard-coated shocks feature 16mm six hole pistons and 4mm gold shock shafts.
- Factory Team Aluminum Top Plate and Steering Rack.
- Factory Team chassis braces with integrated center stiffener.
- 4mm woven carbon fiber shock towers.
- Blue aluminum wheel hexes featuring captured drive pins and nyloc wheel nuts.
- FFC Free Float Caliper brake-system eliminates the possibility of unwanted brake drag while on throttle.
- Two-piece split-center diff mount allows quick and easy access to the center diff.
- High-Torque capacity three-shoe aluminum clutch.
- Full ball bearing drivetrain and steering.
- Factory blue titanium turnbuckles.
- True-Lock kingpin system.
- Heavy duty CVA's with captured pins.
- Woven carbon fiber radio tray.
- Durable 10mm thick suspension arms.
- Rubber rear CVA boots.
- Fully adjustable pre-drilled screw mounted wing.

:: Ready-To-Run

- Aluminum wheel nuts
- Tough, steel turnbuckles
- True-Lock kingpin system
- Heavy duty CVA's with captured pins
- Hard coated shock bodies with 4mm shock shafts and rubber boots
- Durable, molded radio tray & antenna mount
- Sealed radio box
- 3mm aluminum front/rear shock towers
- Durable 10mm thick suspension arms
- Rubber CVA boots
- Fully adjustable pre-drilled screw mounted wing
- Strong anti-wobble wheels
- Anti-foaming fuel tank
- Low-profile, elliptical, high-flow two-stage air filter

:: Additional

:: Factory Team

Your RC8T Truggy comes with all the Factory Team hopups. However, there are some items you will need to complete your kit:

- .21 Class Rear Exhaust Engine
- 2 Channel Radio Set - FM/PCM recommended.
- 4.8v-6.0v Receiver Battery Pack (RC8T will accept either flat or hump pack, AE Part #613 Flat, 612 Hump)
- Muffler, Joining Pack or Manifold & Spring
- AA-Size Batteries for Transmitter (x8)
- Model Car Fuel (30% Nitro recommended)
- Fuel Bottle (AE Part #1749)
- Glow Starter (AE Part #1738)
- Starter Box (AE Part #1750)
- 1/8th Scale Truggy Tires
- FT Tire Glue (AE Part #1597)
- Thread Lock Compound (AE Part#1596)
- Lexan Specific Spray Paint
- FT Body Scissors (AE Part#1737)
- Reamer/Hole Punch
- FT Hex Driver Set (AE Part #1541)
- Hobby Knife
- Needle Nose Pliers
- Wire Cutters

:: Ready-To-Run

Your RC8T RTR Truggy comes factory assembled including radio gear. However, there are some items you will need to complete your kit:

- AA-Size Batteries for Transmitter (x8)
- AA-Size Batteries for the onboard electronics (x4) (or a 4.8v-6.0v Receiver Battery Pack, 3x2 pack recommended, AE Part #613 Flat, 612 Hump)
- D-Size Battery for Glow Starter (x1)
- 6-Cell Sub-C Size Battery Pack for Pro-Start Starting Gun, AE Part #695
- Charger for Battery Pack
- Model Car Fuel (20%-30% Nitro recommended)

:: RC8T FT Only Notes

Your RC8T FT Truggy comes with pre-built Diffs, Turnbuckles, and Shocks. The manual goes through the complete build of the kit for your future reference and maintenance.
Page 4: **Fill** the front and rear differentials with 7000cst diff fluid
Page 5: **Fill** the center differential with 7000cst diff fluid
Page 7-8: **Fill** pre-assembled shocks with shock oil.
You can now continue on to build the rest of your new Team Associated FT RC8T Kit!

Associated Electrics, Inc.
26021 Commercentre Dr.
Lake Forest, CA 92630

Customer Service
Tel: 949.544.7500
Fax: 949.544.7501

http://www.TeamAssociated.com • http://www.RC10.com

:: Front and Rear Differentials

Bag A2/A3

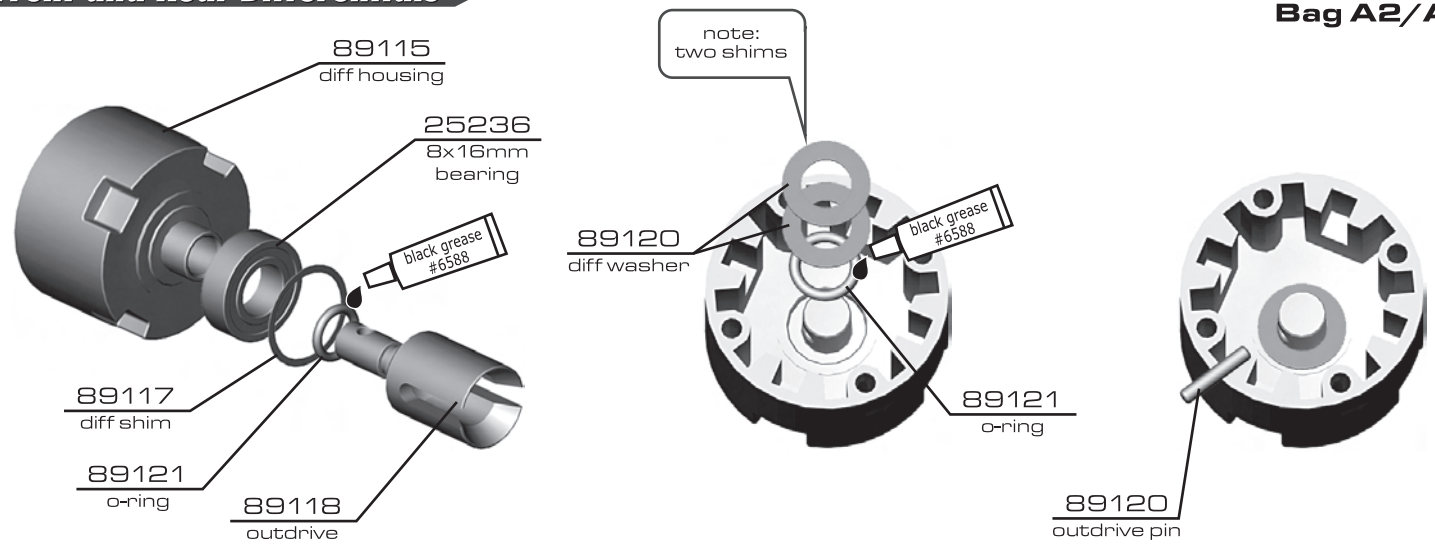

:: Front and Rear Differentials (cont.)

Bag A2/A3

:: Front and Rear Differentials (cont.)

Bag A2/A3

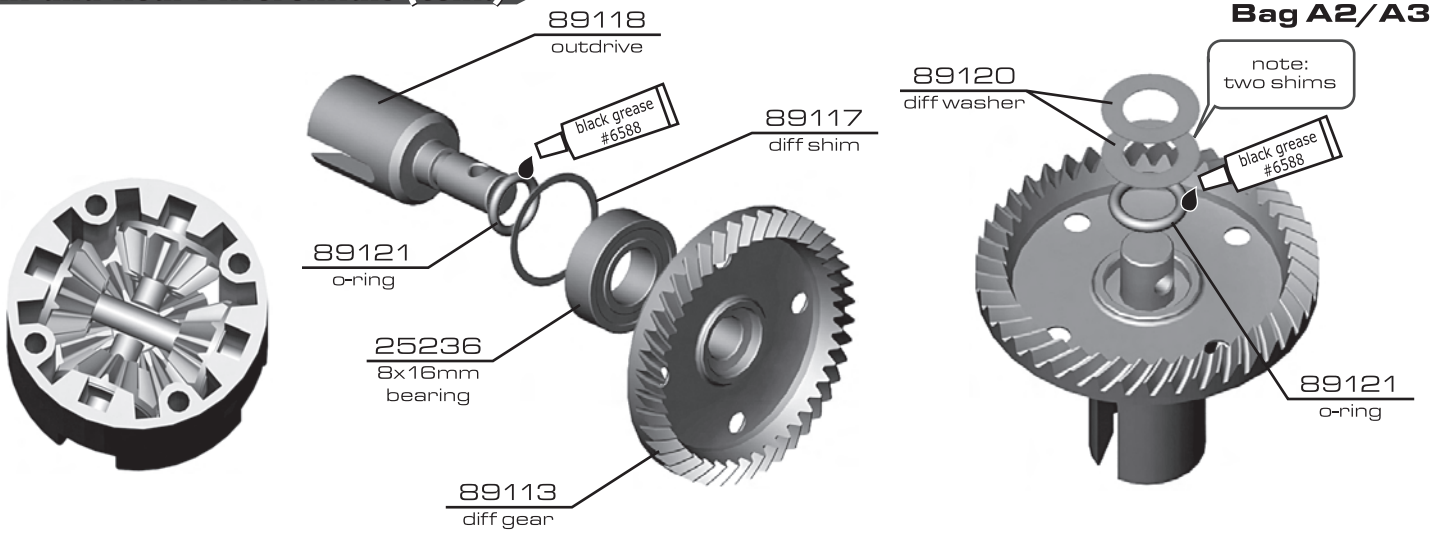

:: Front and Rear Differentials (cont.)

Bag A2/A3

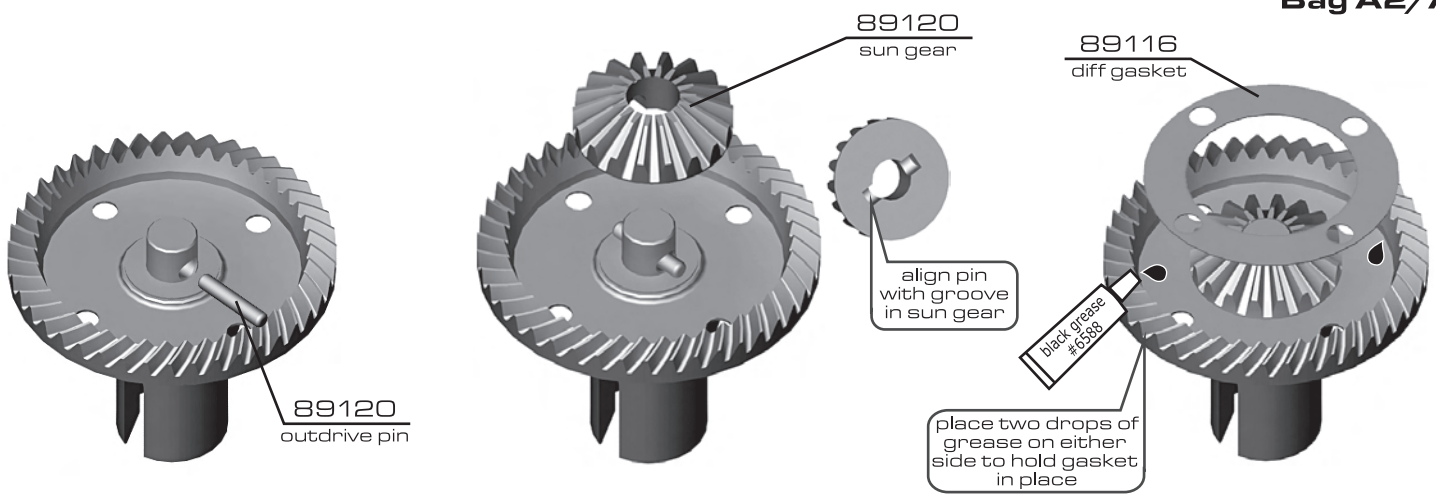

:: Front and Rear Differentials (cont.)

Bag A2/A3

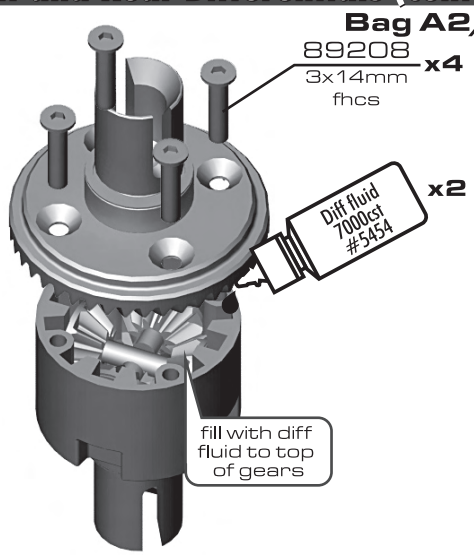

:: Center Differential

Bag A1

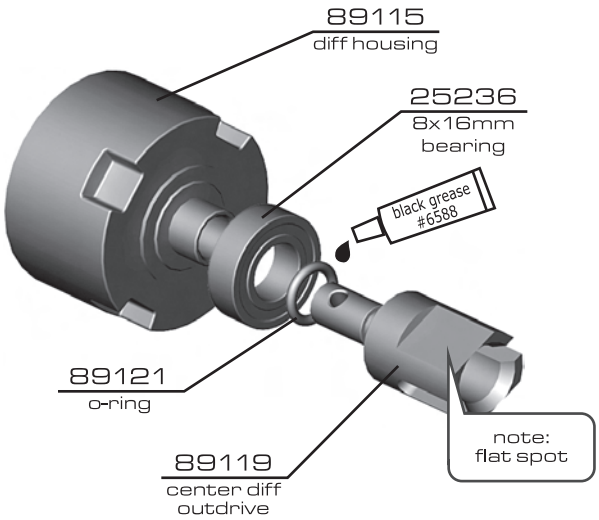

:: Center Differential (cont.)

Bag A1

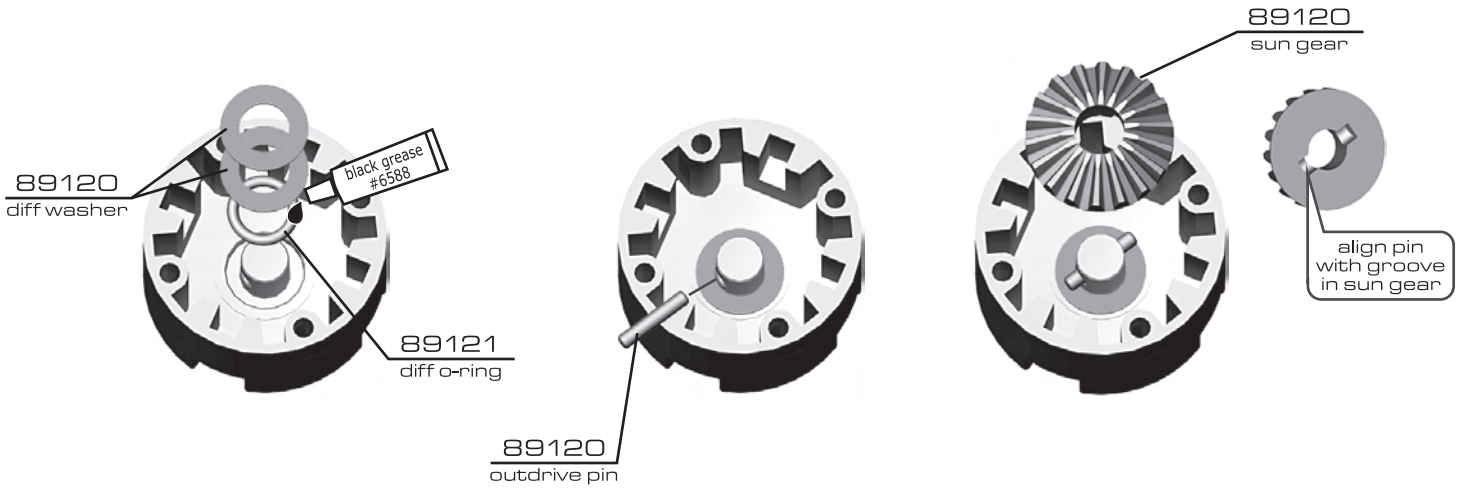

:: Center Differential (cont.)

Bag A1

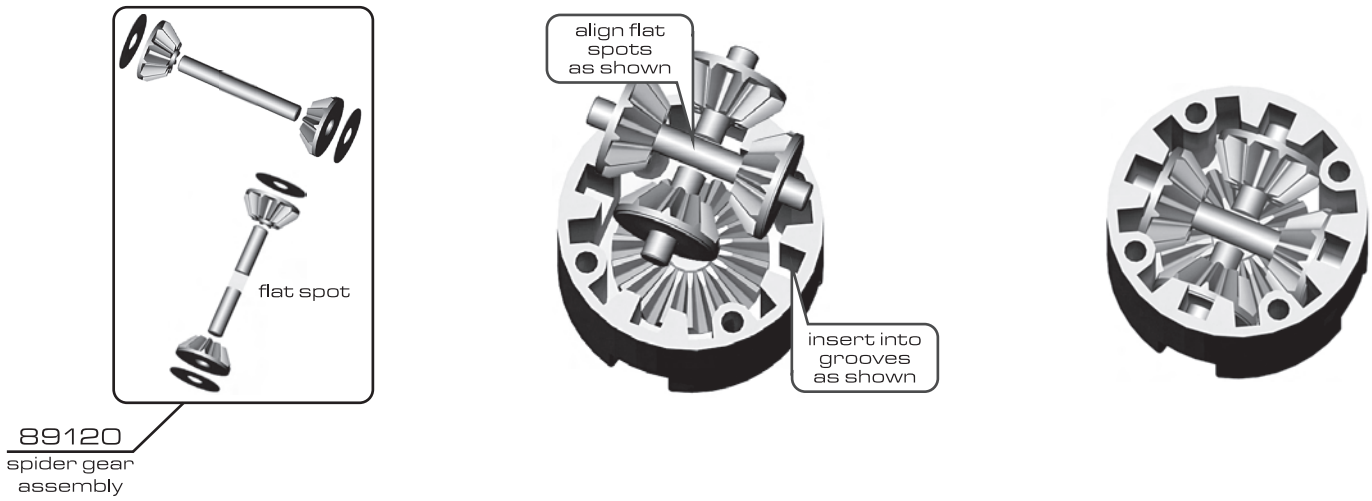

:: Center Differential (cont.)

Bag A1

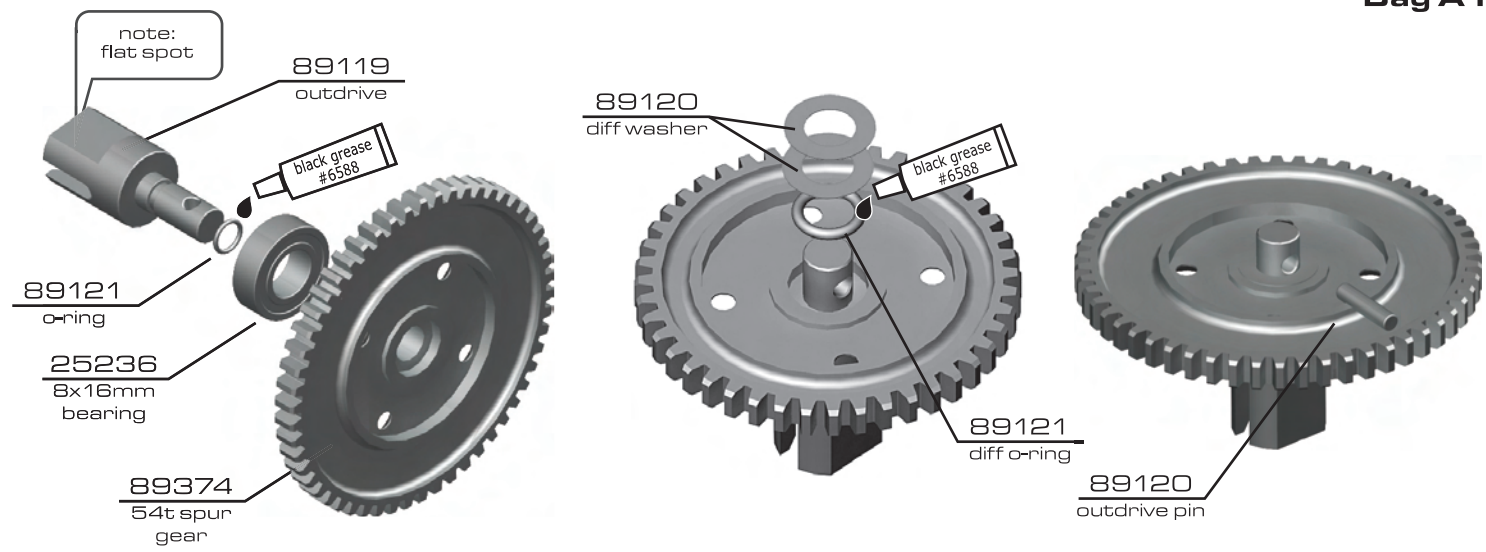

:: Center Differential (cont.)

Bag A1

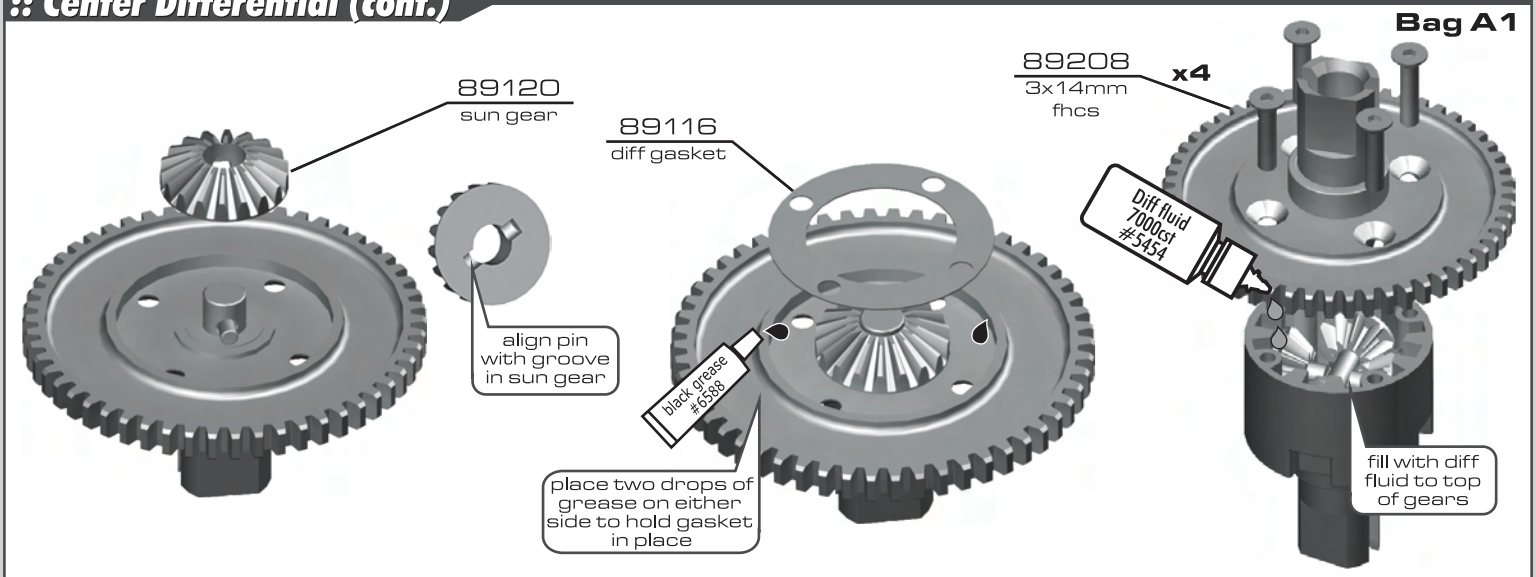

:: Chassis Braces

Bag B

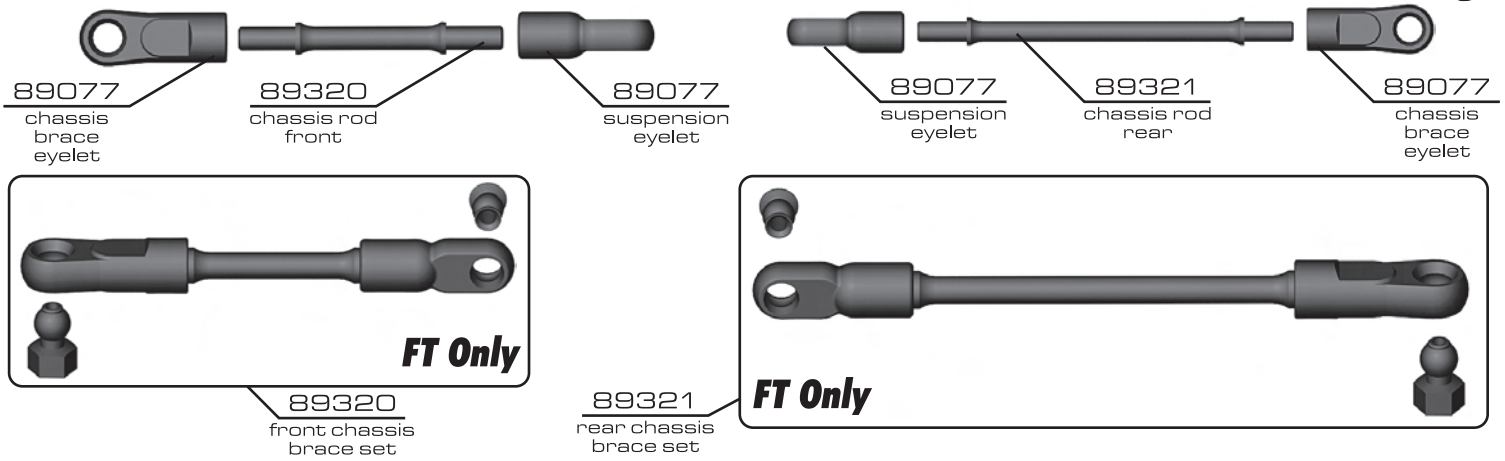

:: Steering Turnbuckles

Bag B

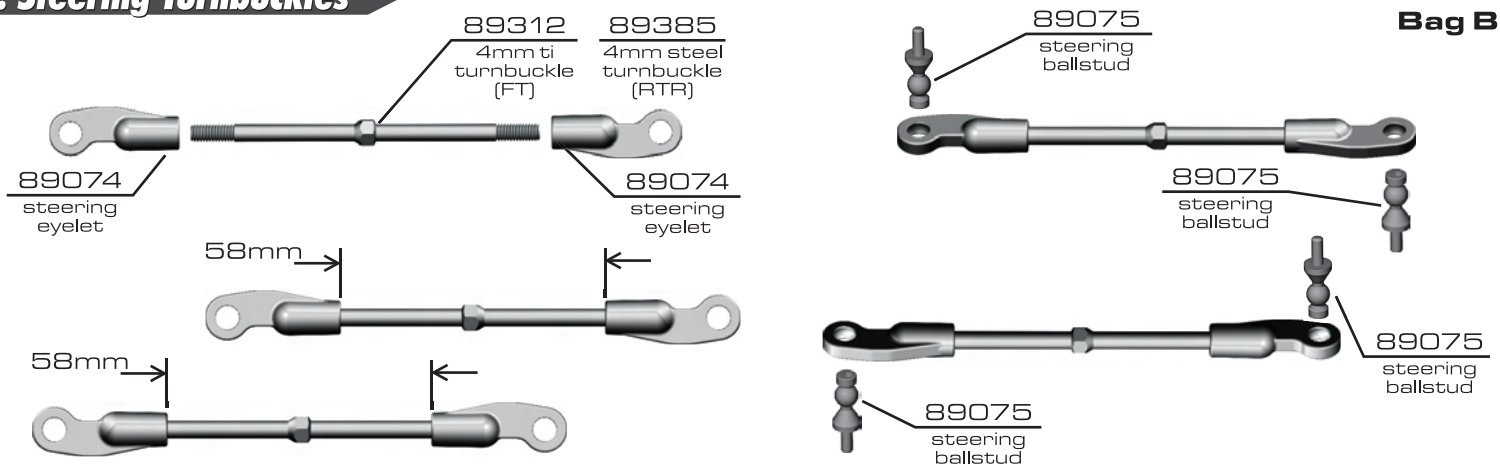

:: Servo Turnbuckle

Bag B

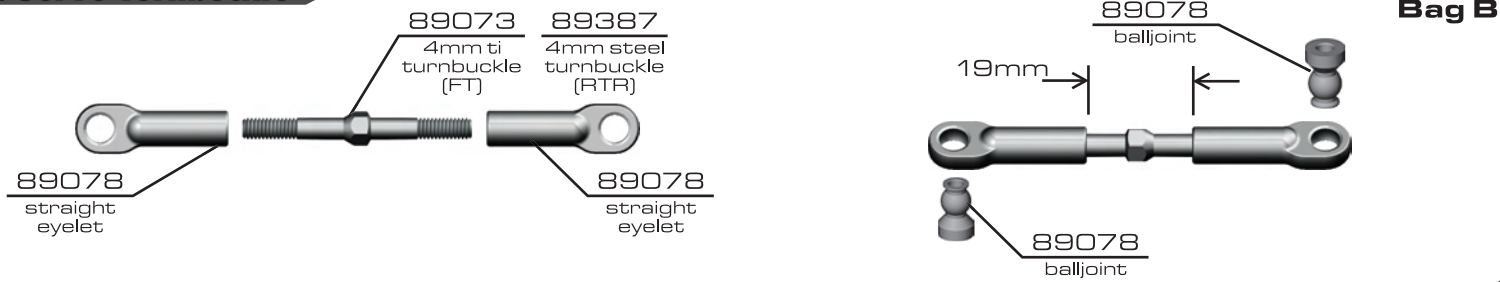

:: Camber Turnbuckles

Bag B

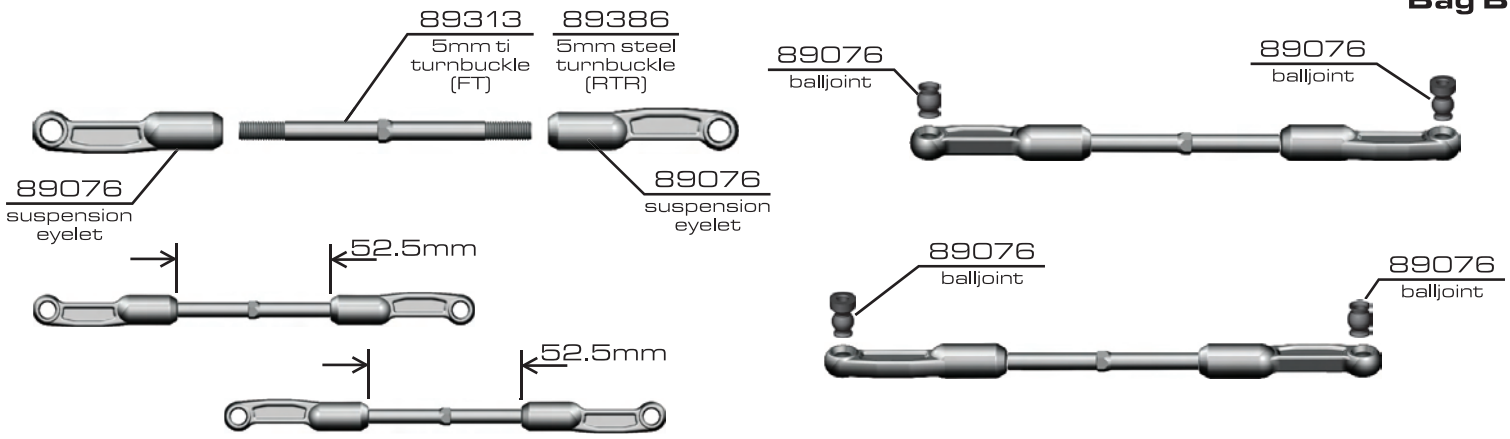

:: Shocks

Bag C

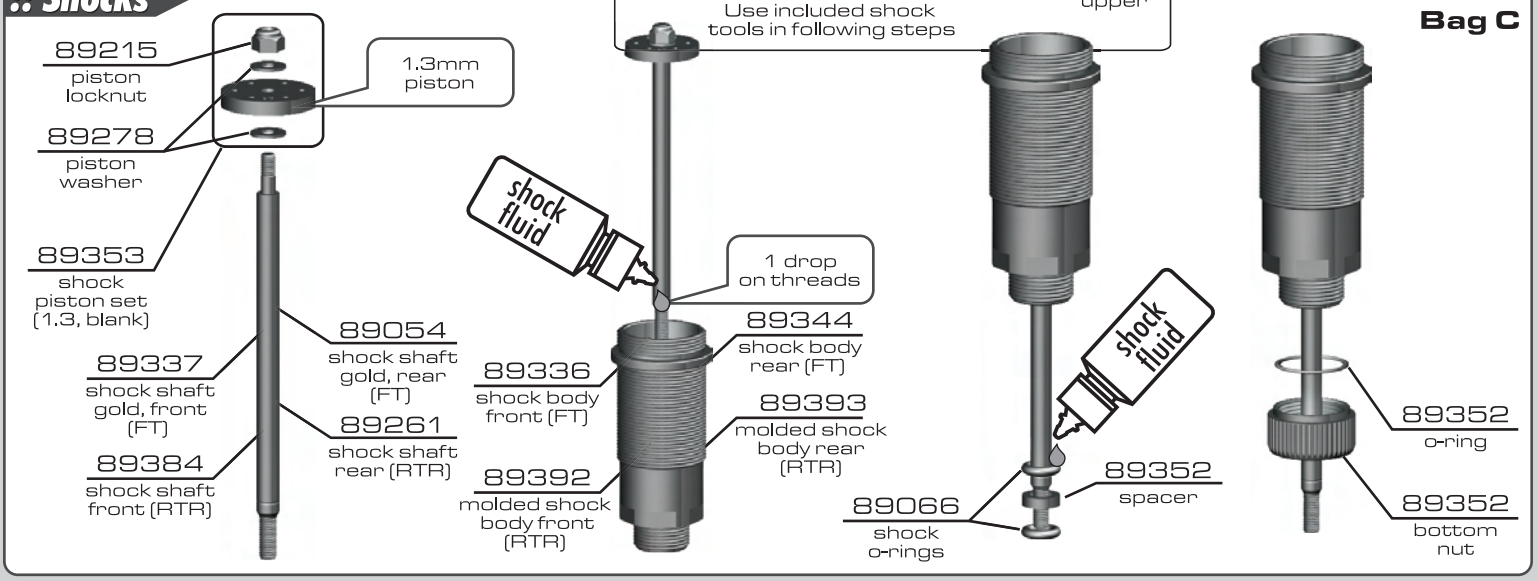

:: Shocks (cont.)

Bag C

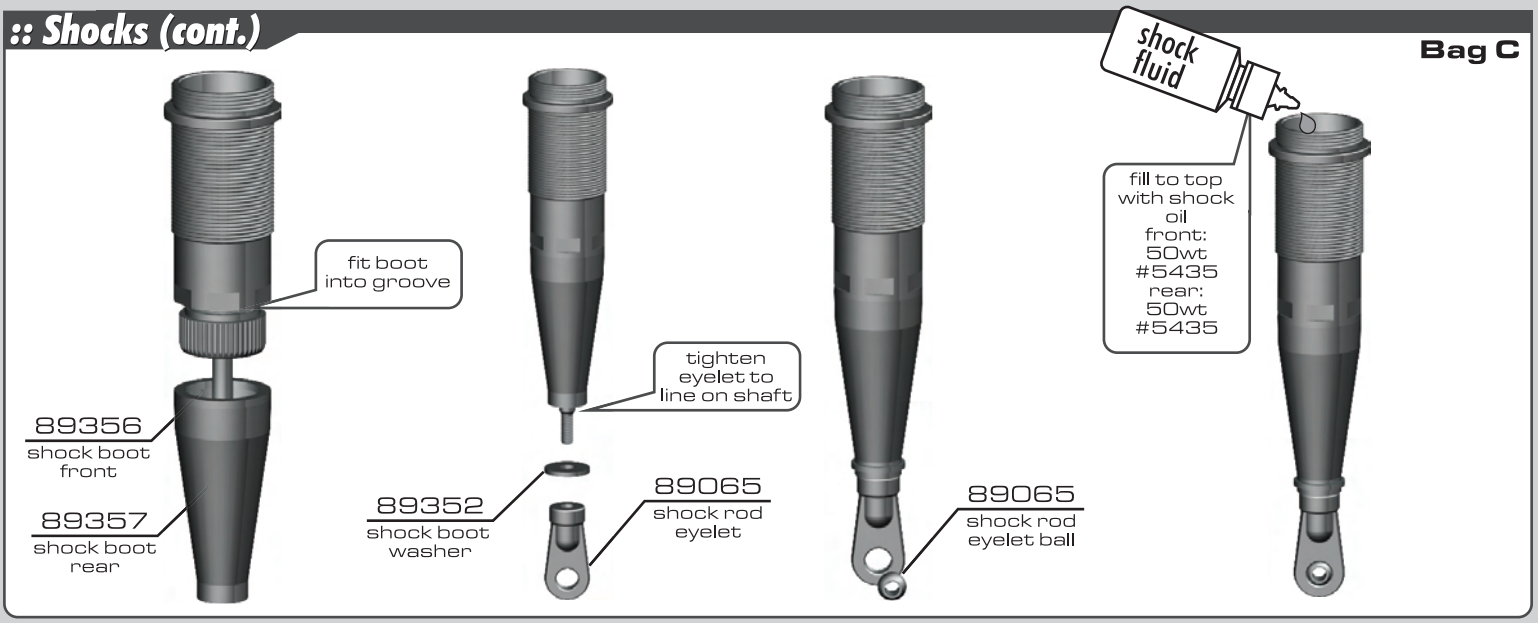

:: Shocks (cont.)

Bag C

Bladder installation

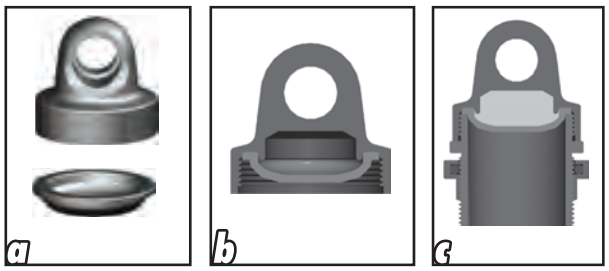

As you install the cap with bladder, it will force out any extra oil. If you install the cap with the shaft fully extended, you are running FULL REBOUND.
To run less rebound, unthread the cap 1-2 turns and compress the shaft to the desired position and re-tighten the cap.

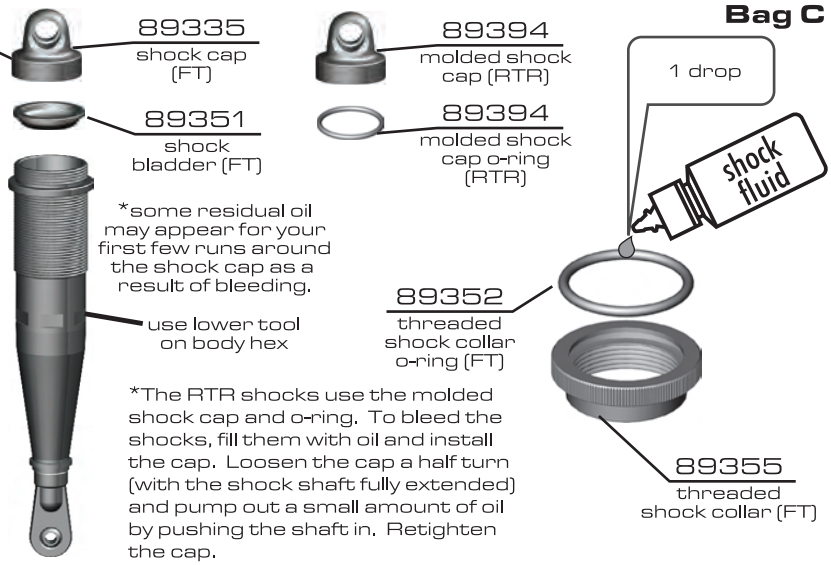

*The RTR shocks use the molded shock cap and o-ring. To bleed the shocks, fill them with oil and install the cap. Loosen the cap a half turn (with the shock shaft fully extended) and pump out a small amount of oil by pushing the shaft in. Retighten the cap.

:: Shocks (cont.)

Bag C

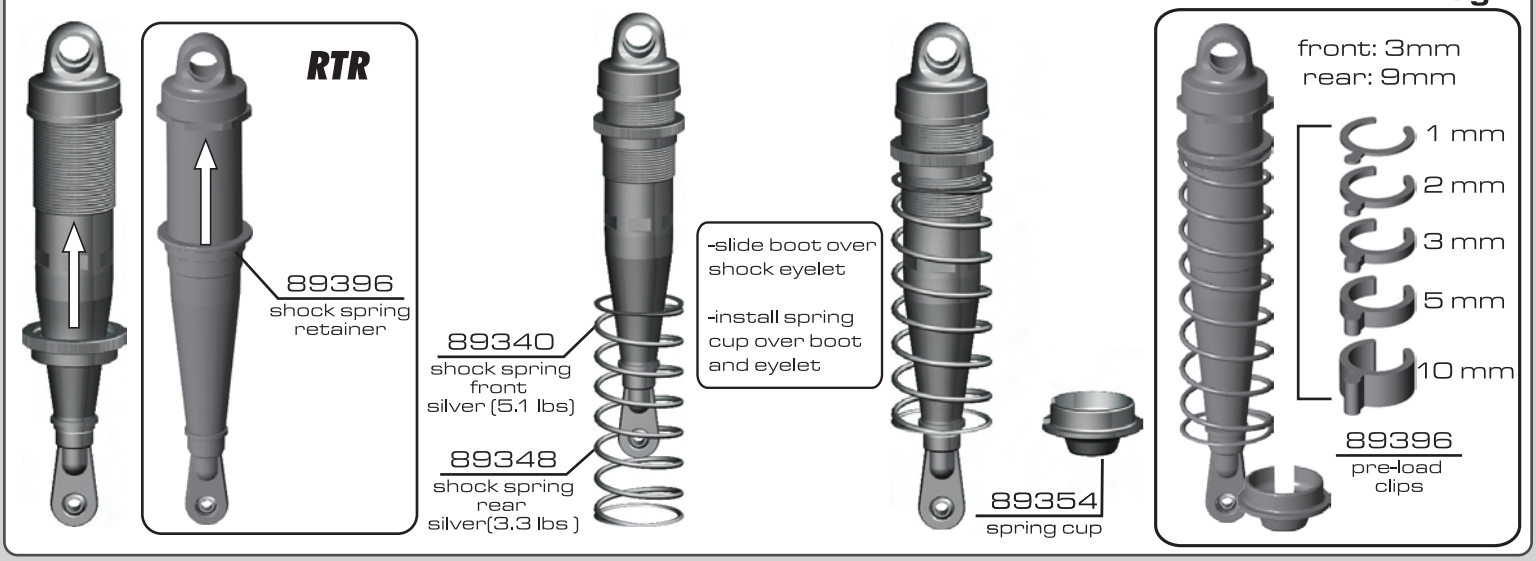

:: Steering

FT Only

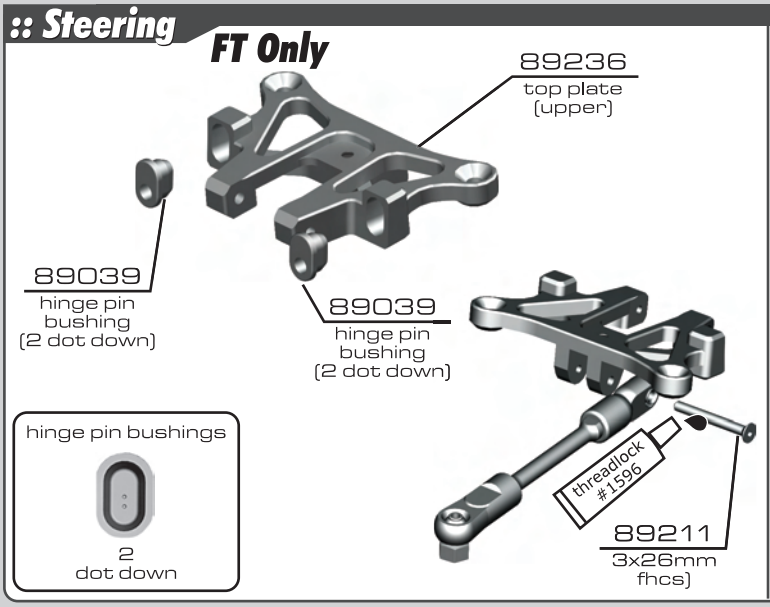

RTR Only

Bag D1

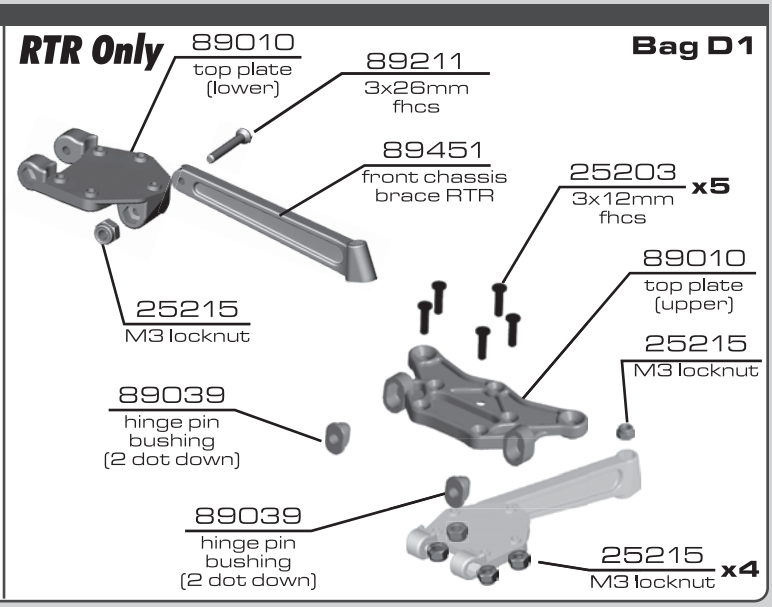

:: Steering (cont.)

Bag D2

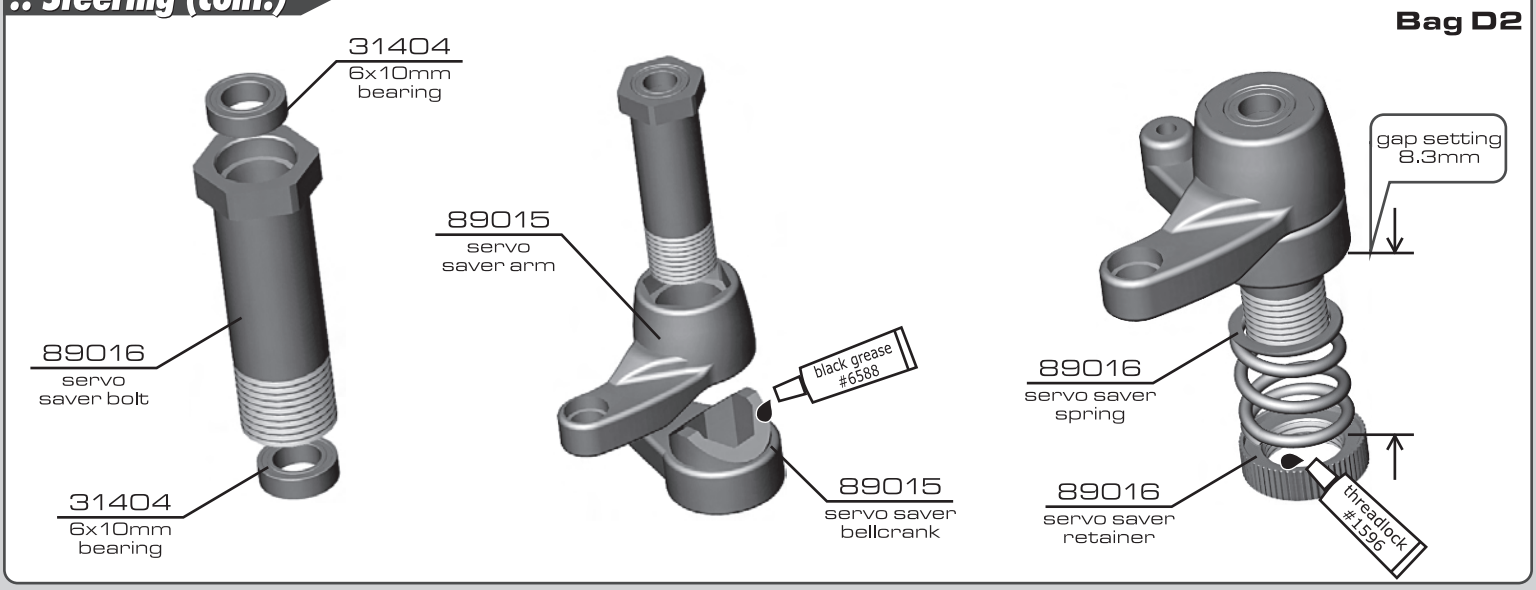

:: Steering (cont.)

Bag D3

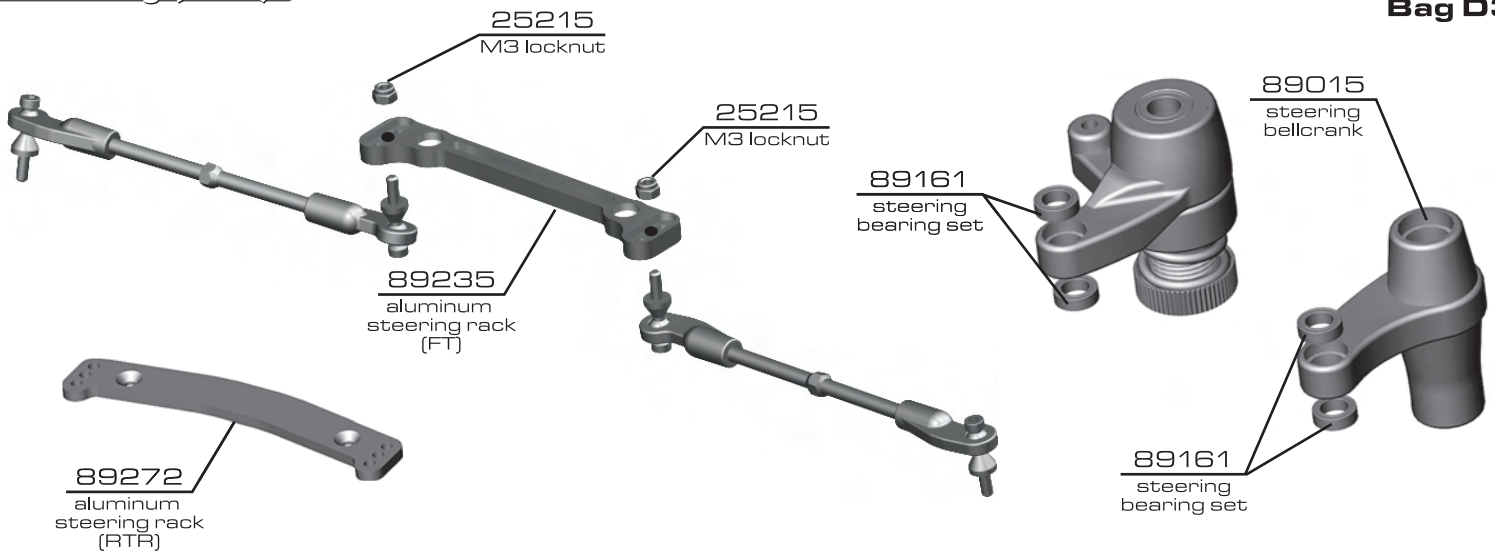

:: Steering (cont.)

Bag D3

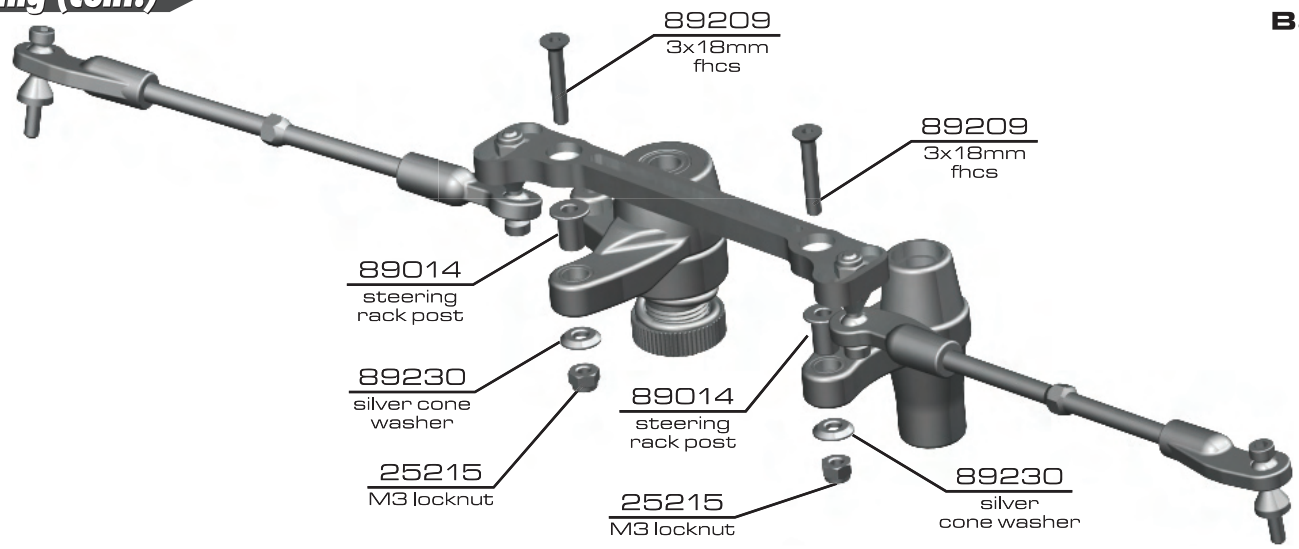

:: Steering (cont.)

Bag D3

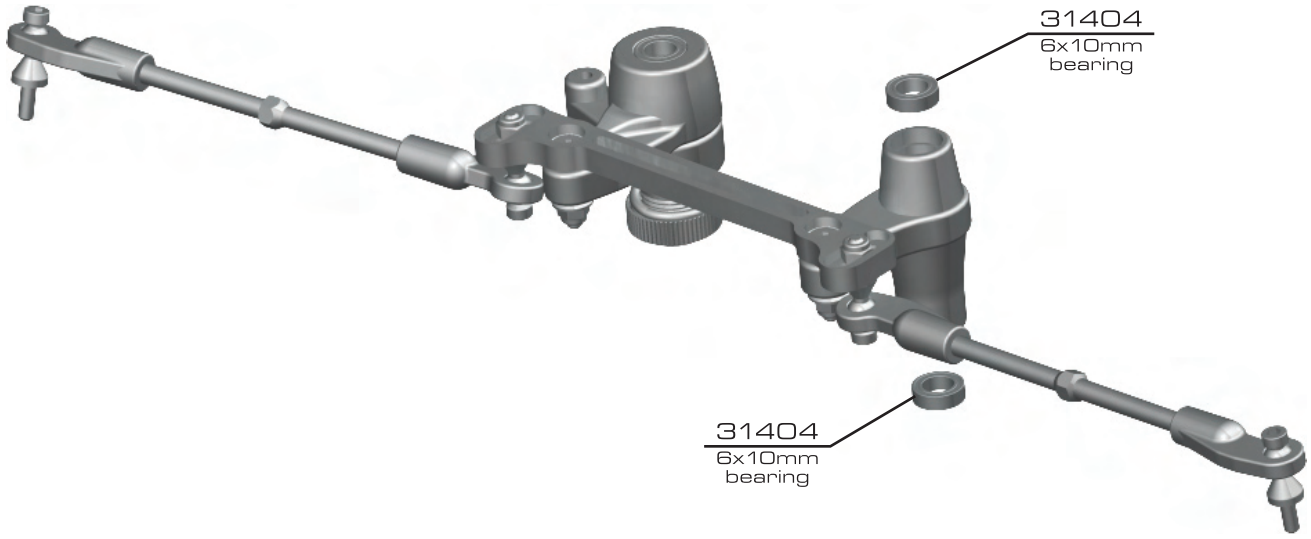

:: Steering (cont.)

Bag D3

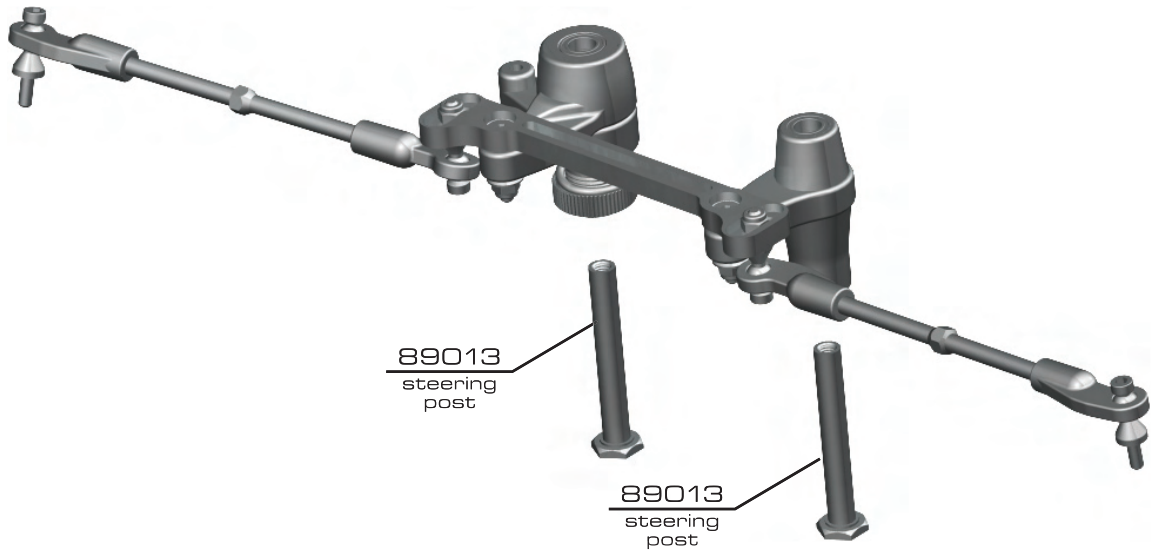

:: Steering (cont.)

Bag D3

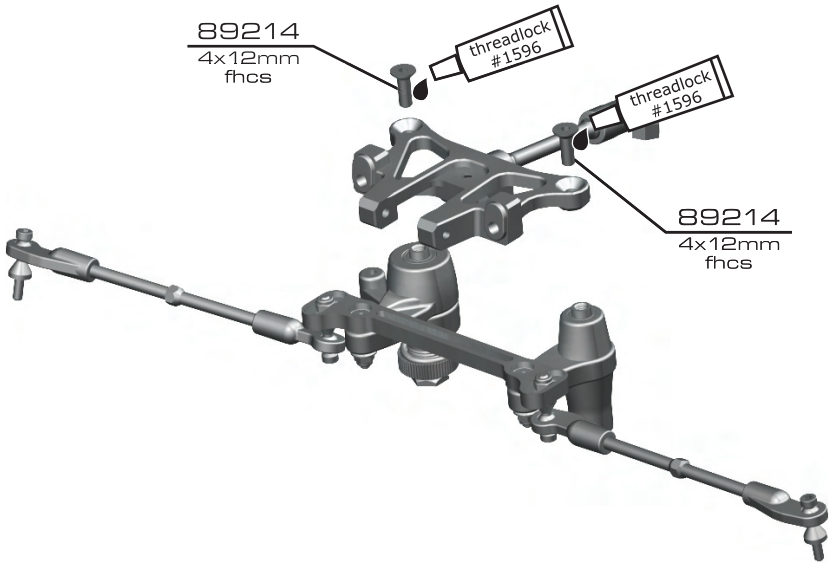

:: Front Gearbox

Bag E1

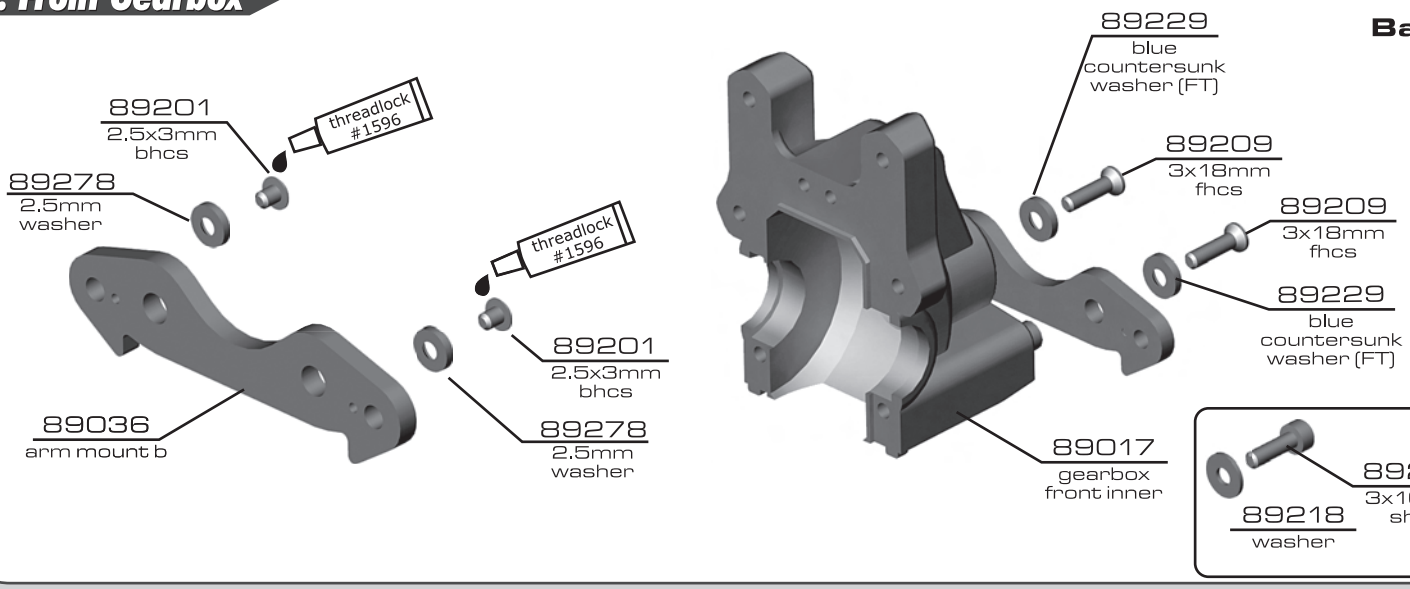

:: Front Gearbox (cont.)

Bag E2

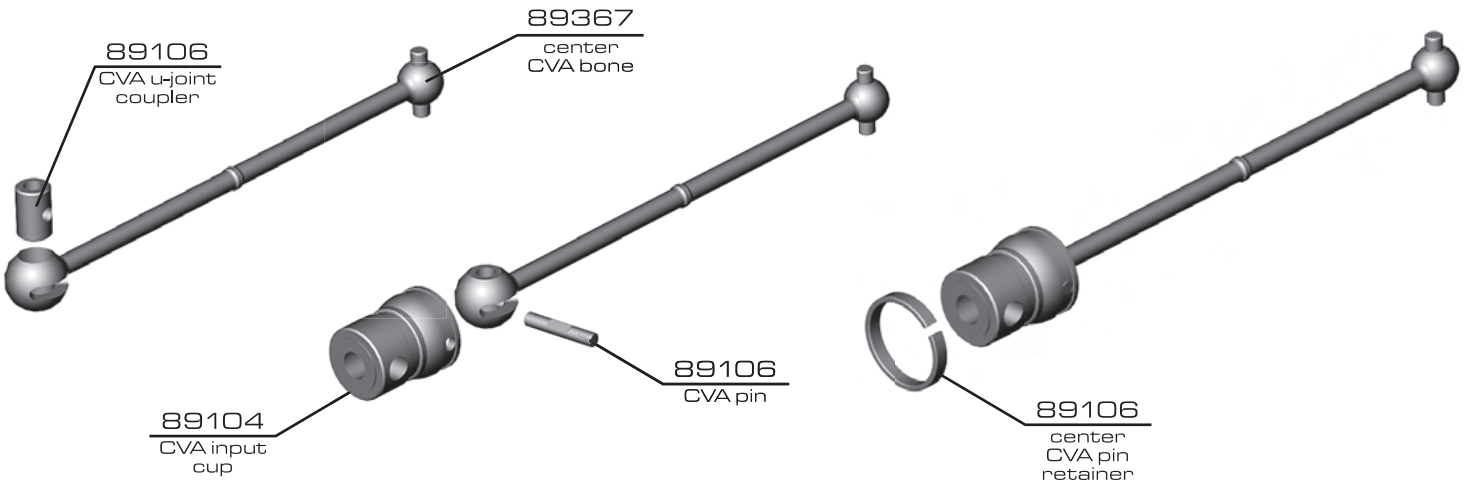

:: Front Gearbox (cont.)

Bag E2

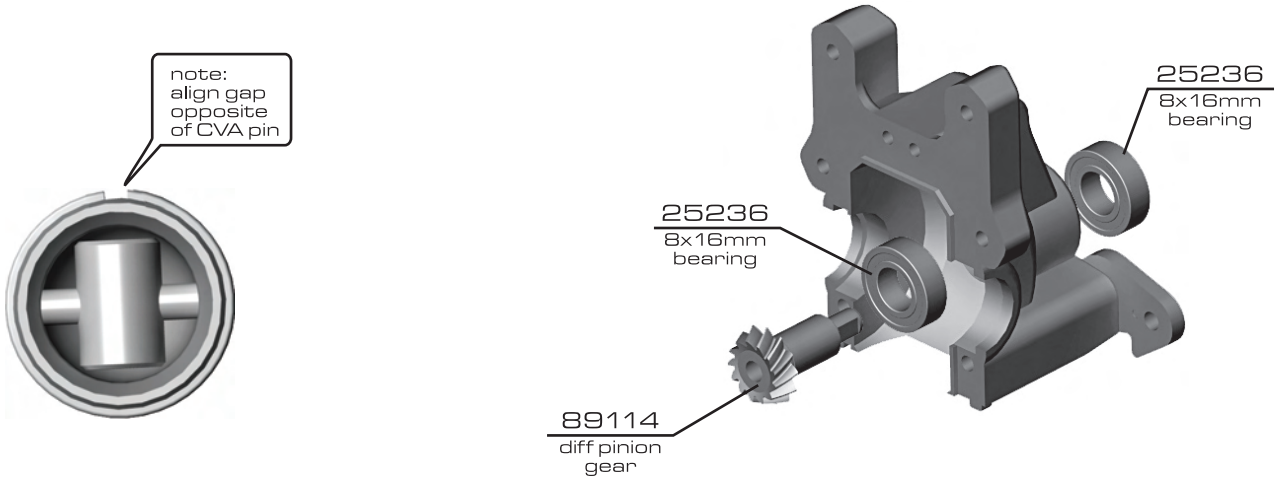

:: Front Gearbox (cont.)

Bag E2

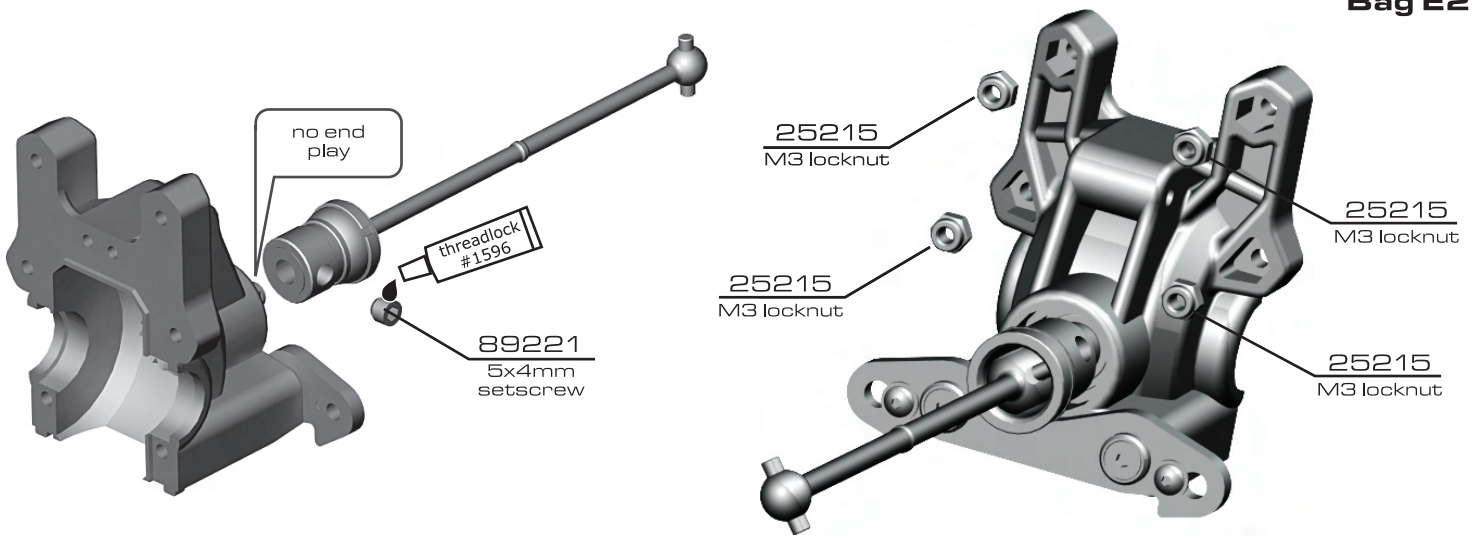

:: Front Gearbox (cont.)

Bag E3

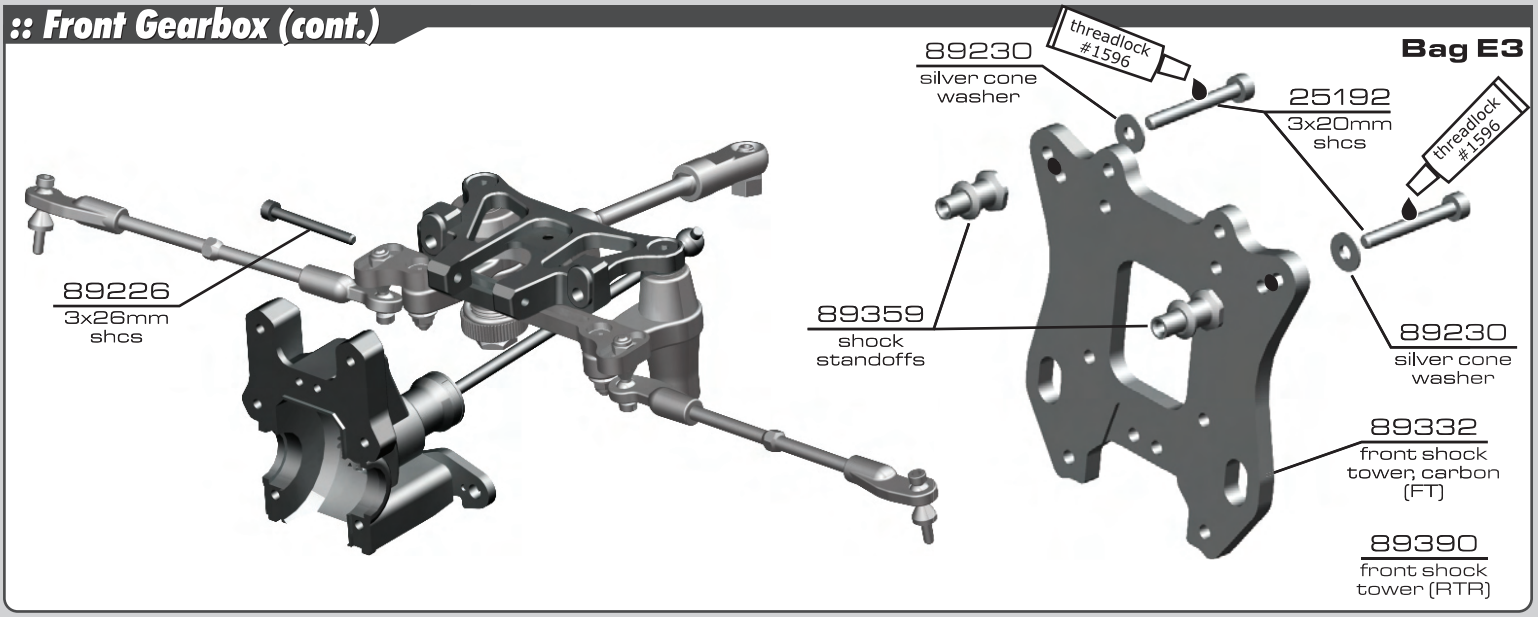

:: Front Gearbox (cont.)

Bag E3/E4

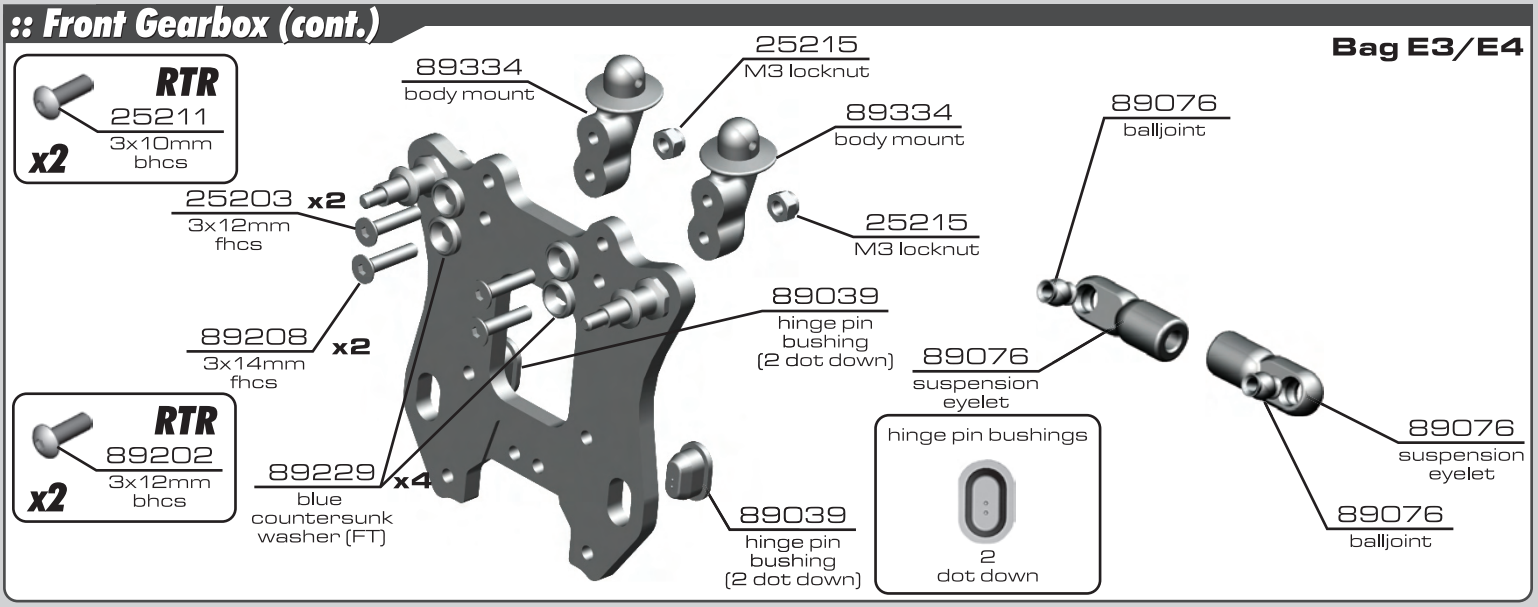

:: Front Gearbox (cont.)

Bag E4

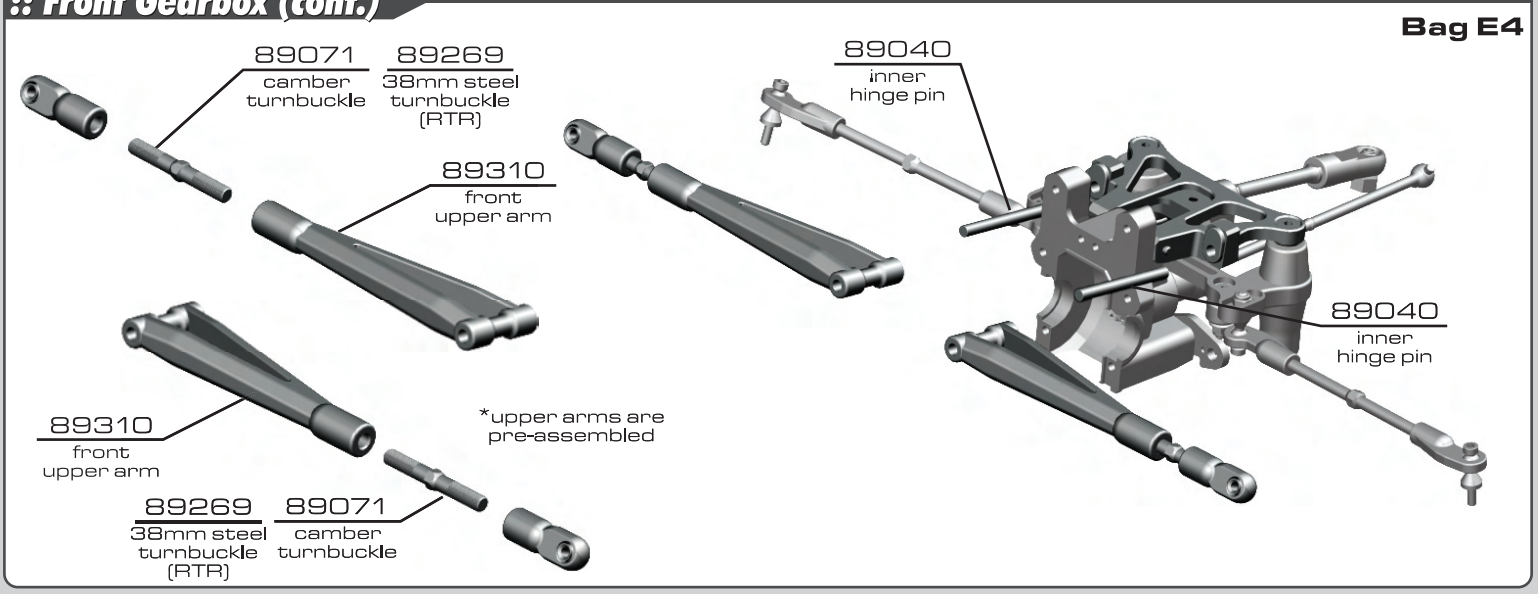

:: Front Gearbox (cont.)

Bag E3/E4

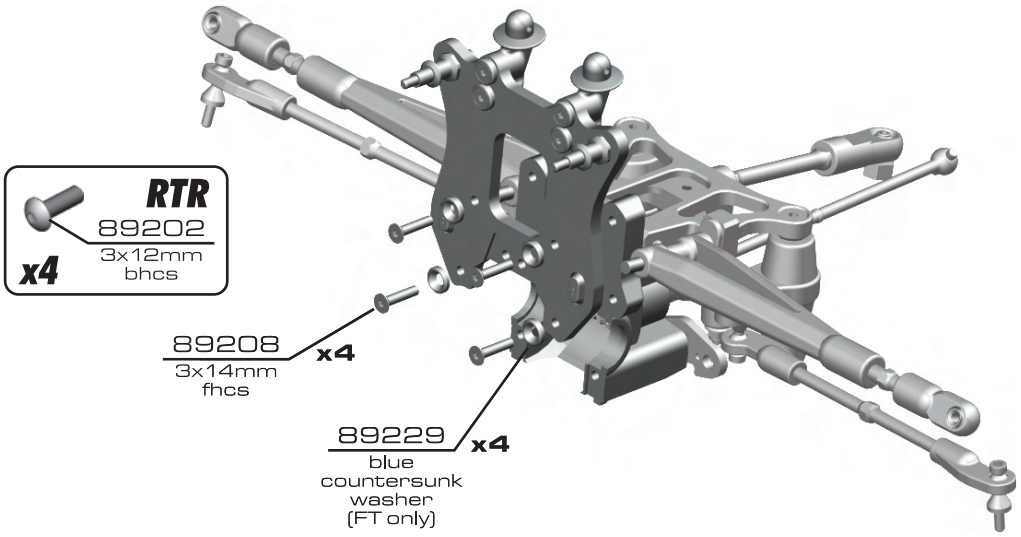

:: Front Gearbox (cont.)

Bag E4

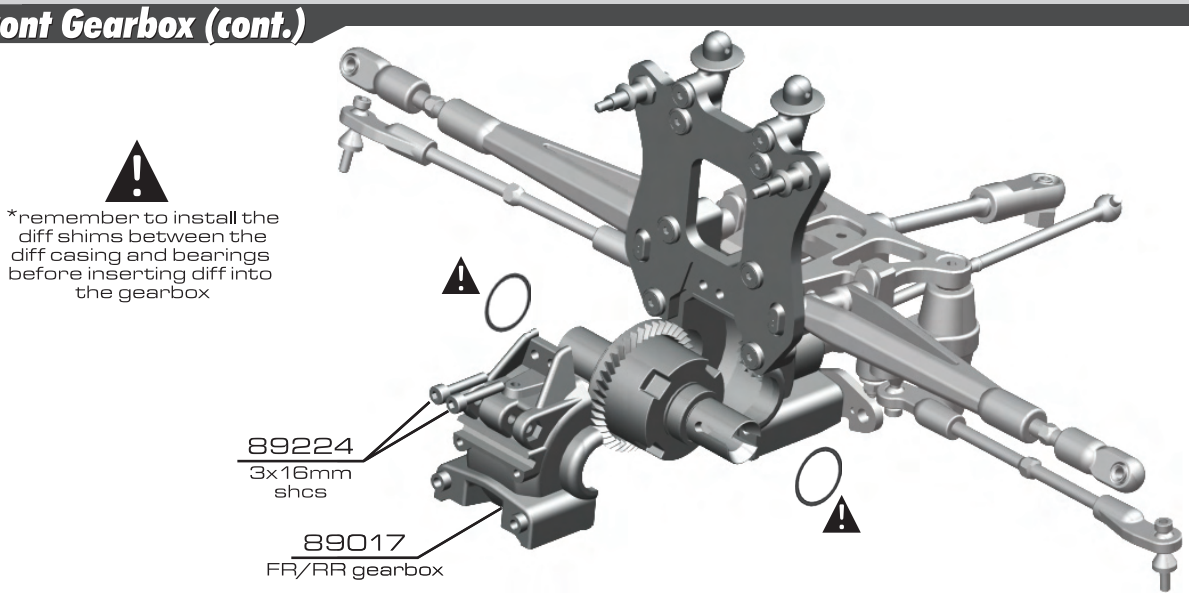

:: Suspension

Bag F1

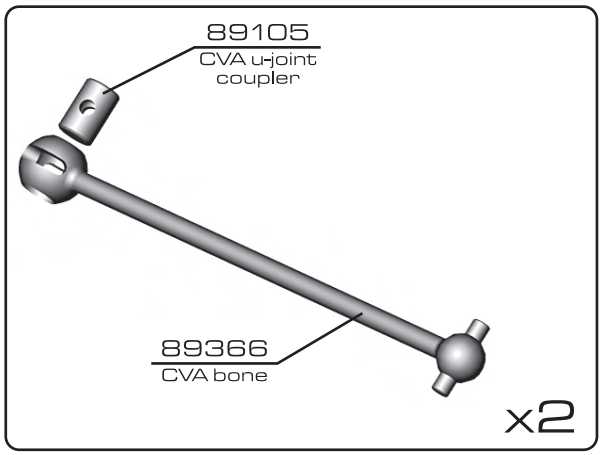

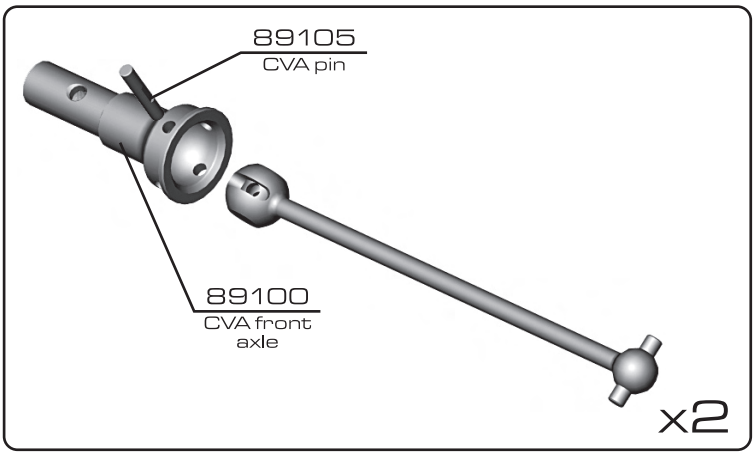

:: Suspension (cont.)

Bag F2

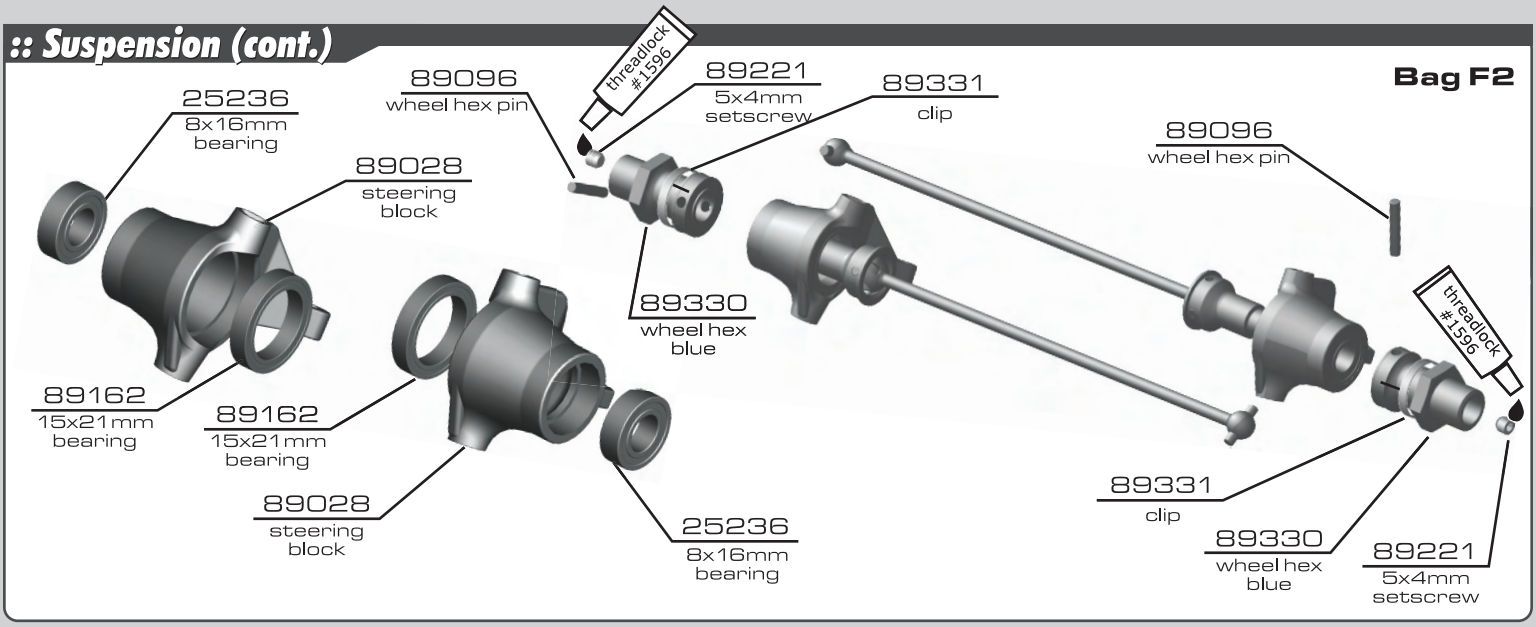

:: Suspension (cont.)

Bag F3

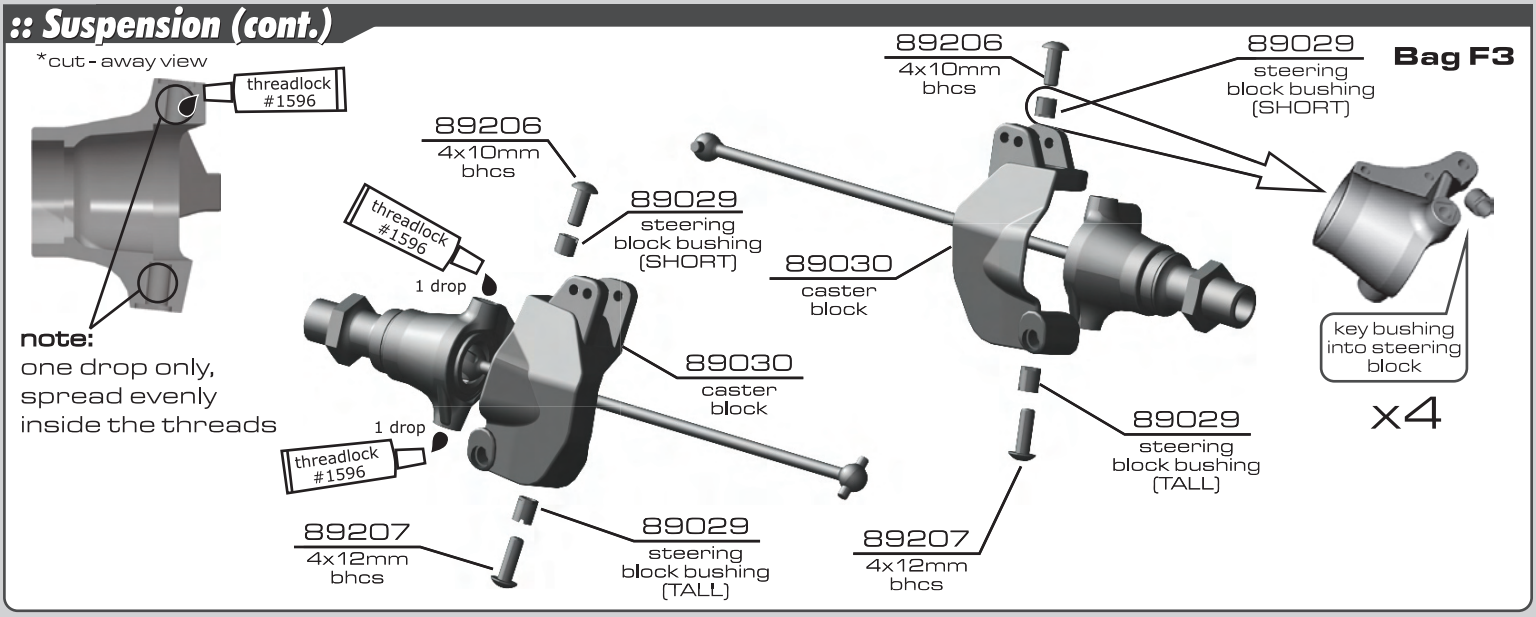

:: Suspension (cont.)

Bag F4

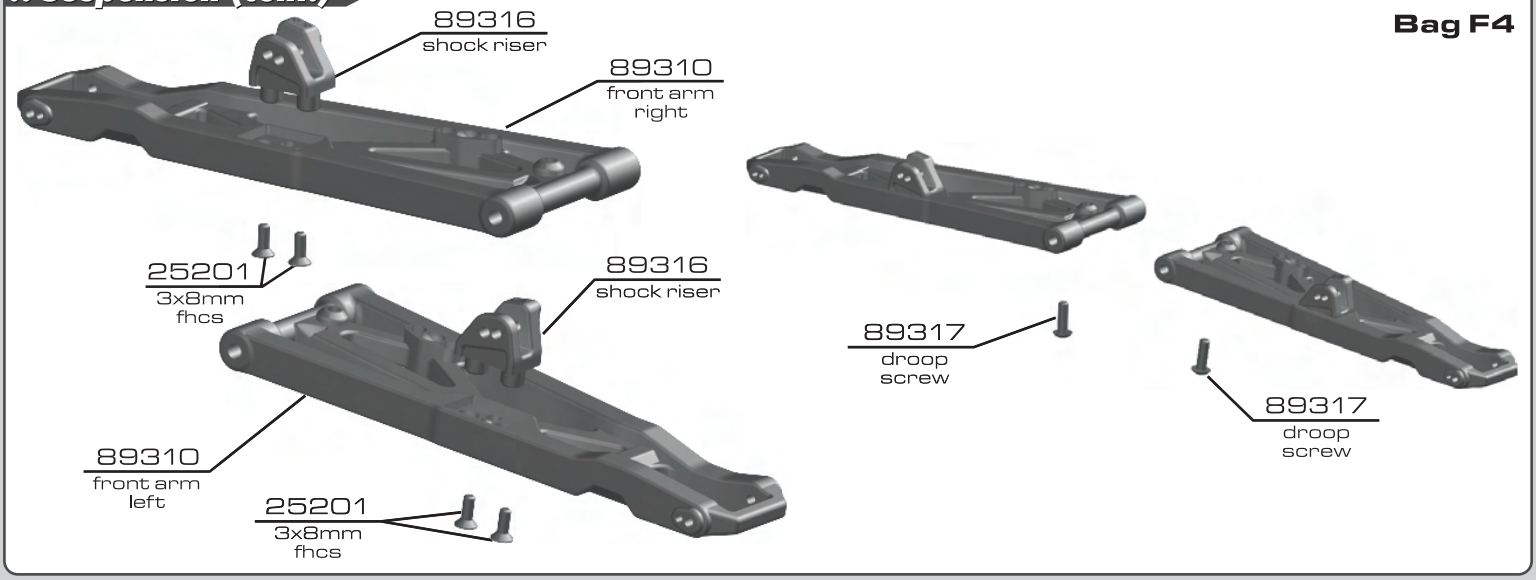

:: Suspension (cont.)

Bag F4

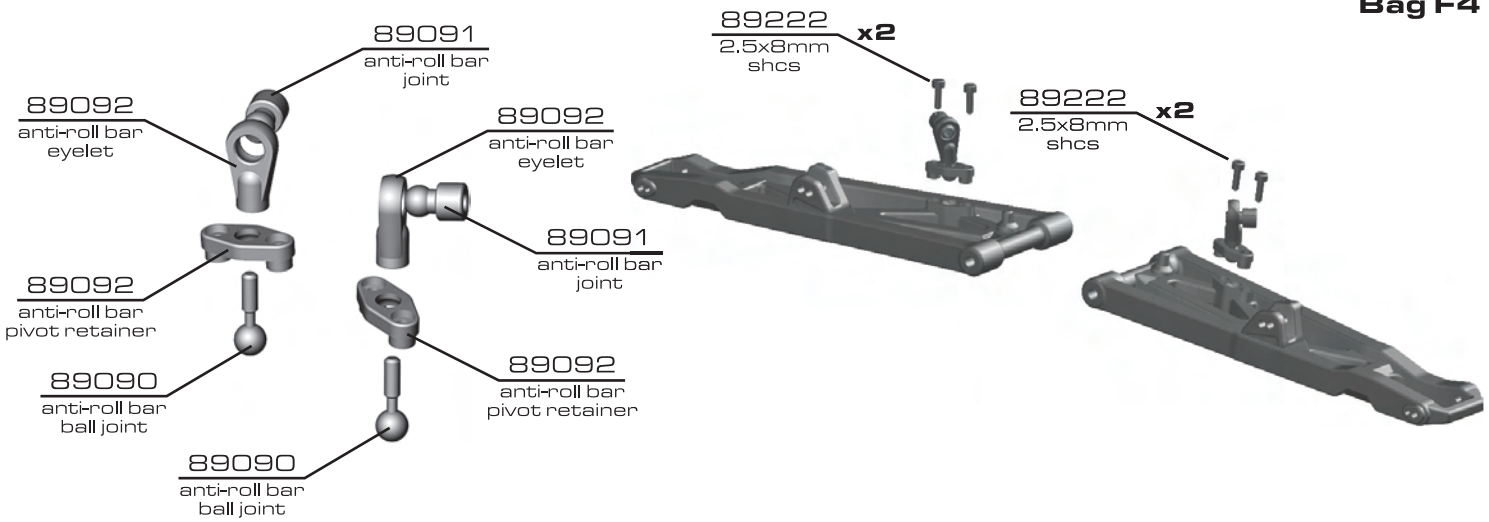

:: Suspension (cont.)

Bag F5

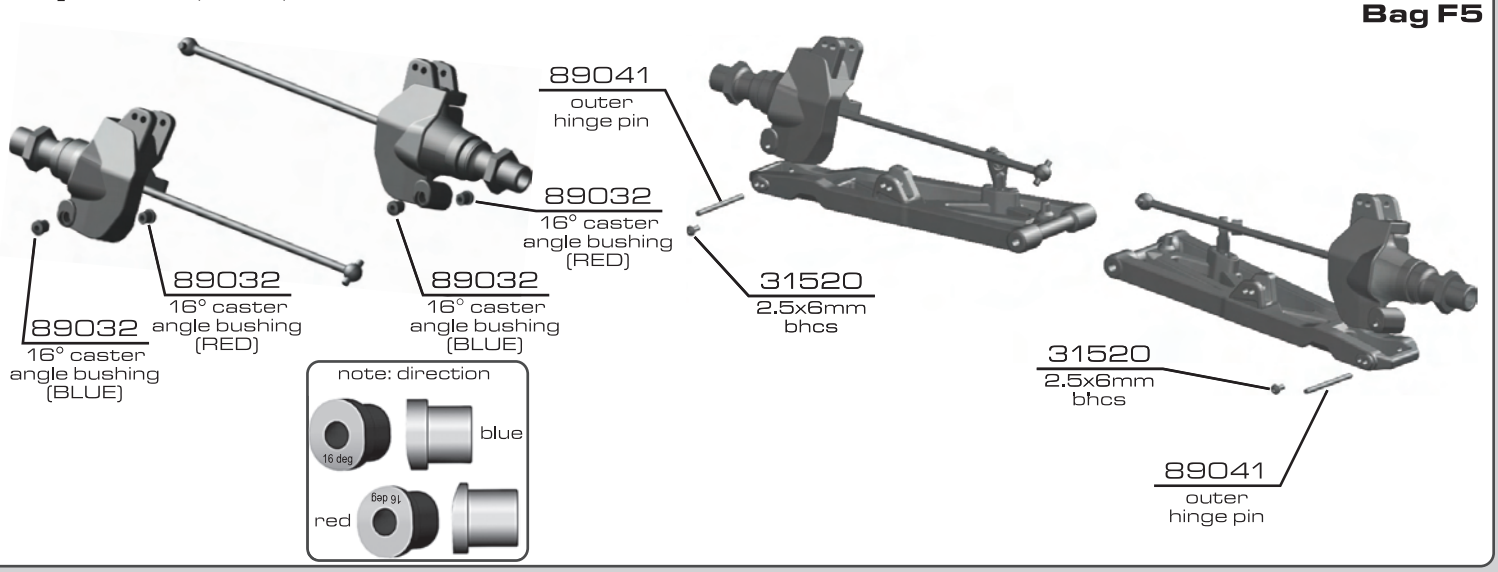

:: Suspension (cont.)

Bag F5

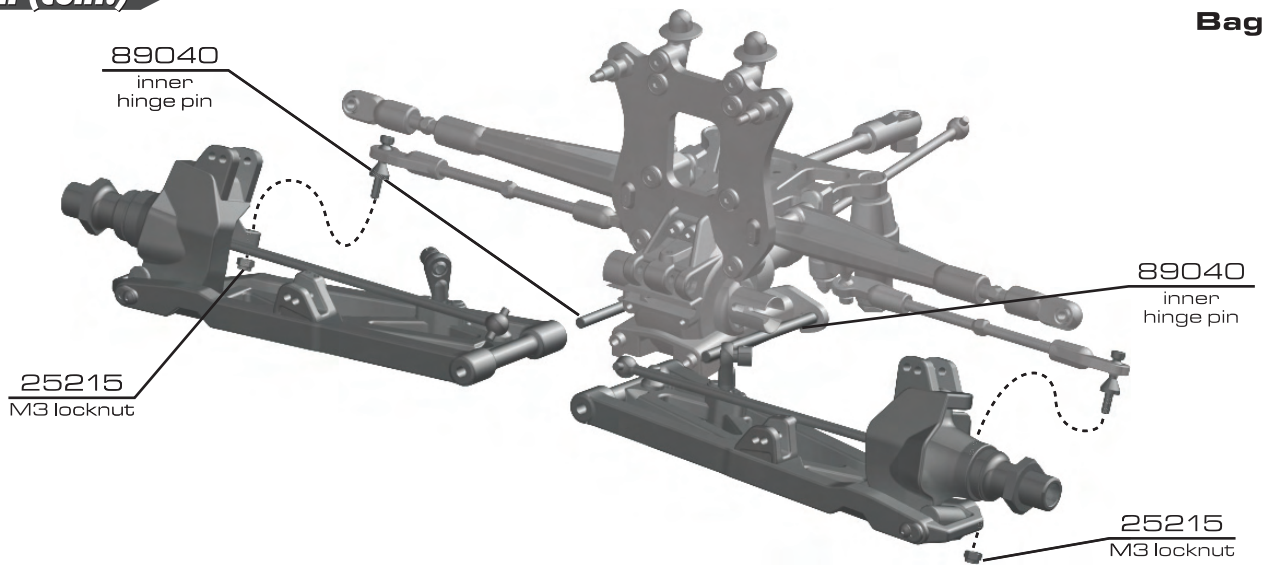

:: Suspension (cont.)

Bag F5

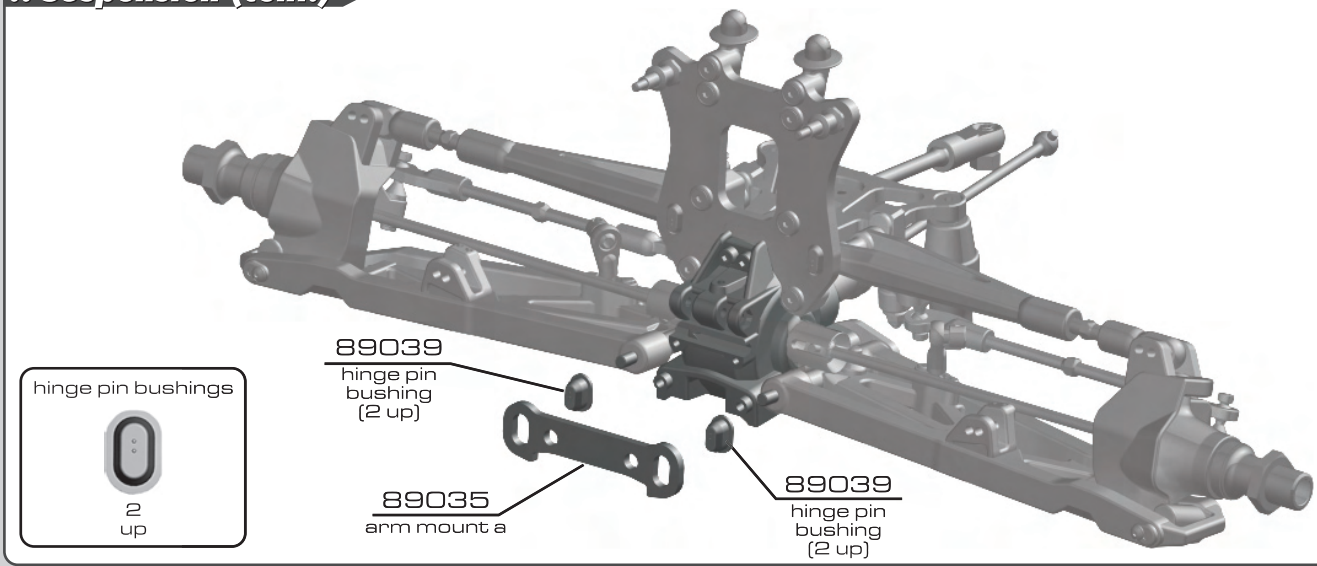

:: Suspension (cont.)

Bag F5

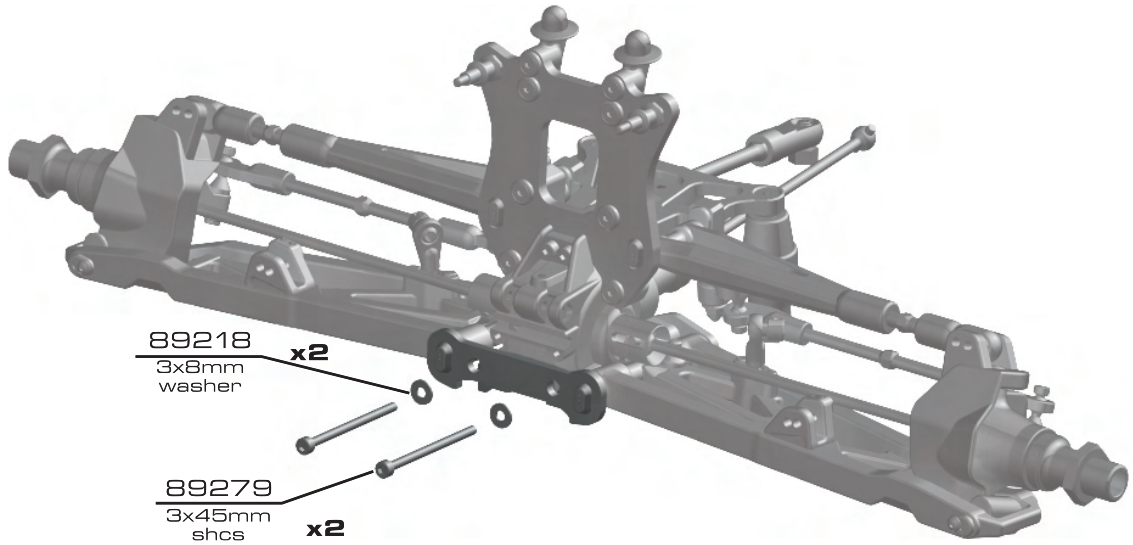

:: Suspension (cont.)

Bag F5

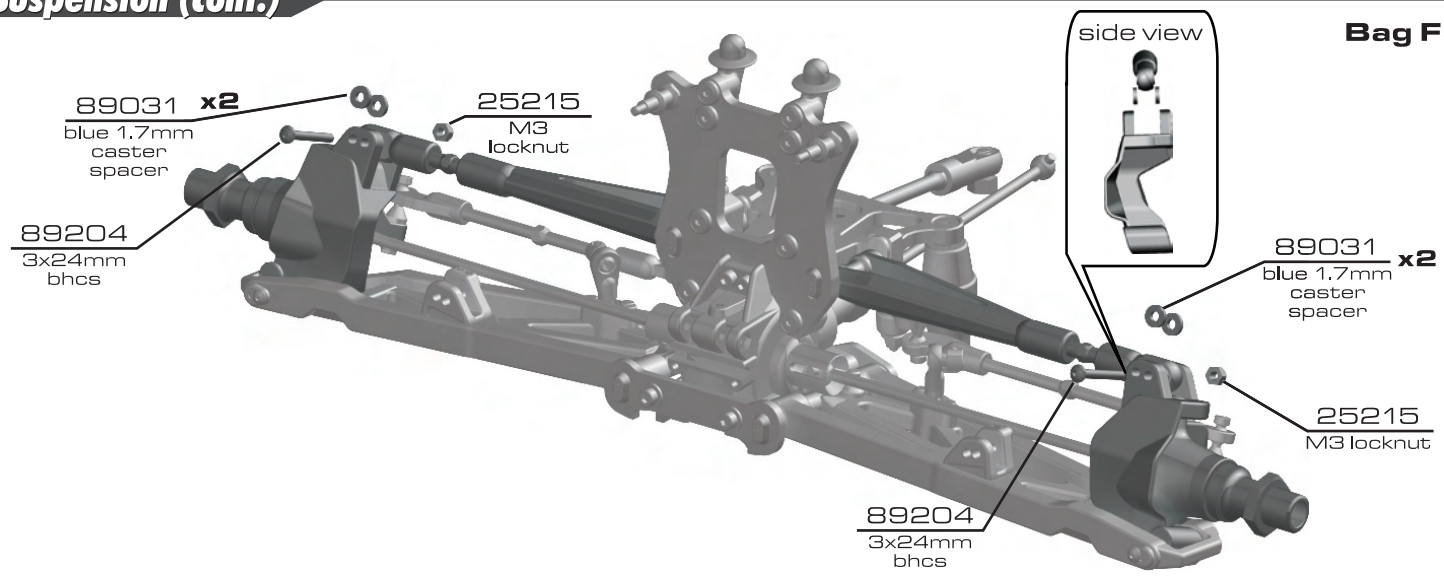

:: Suspension (cont.)

Bag F6

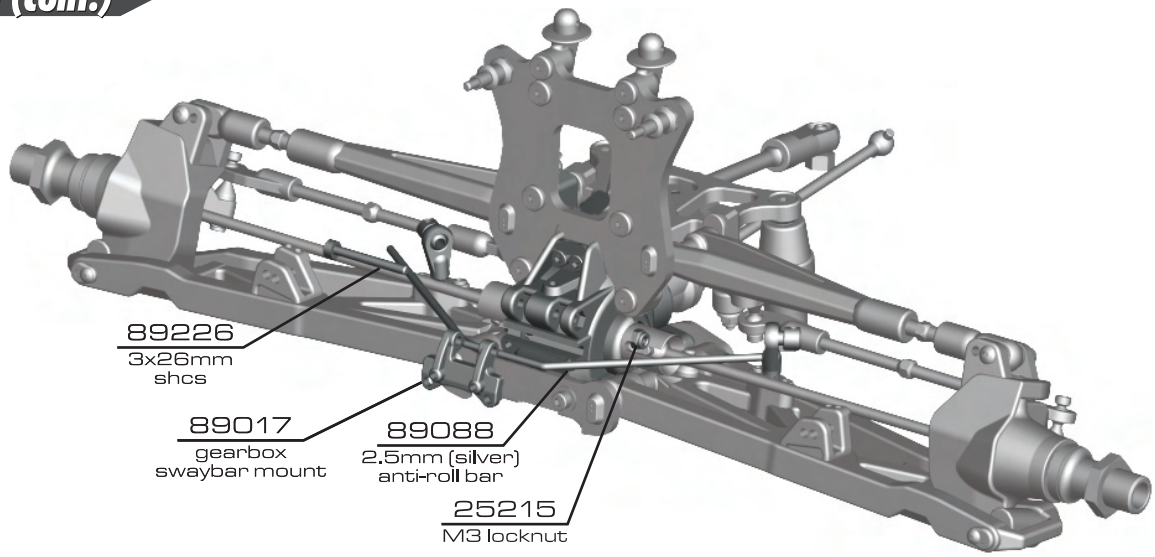

:: Suspension (cont.)

Bag F6

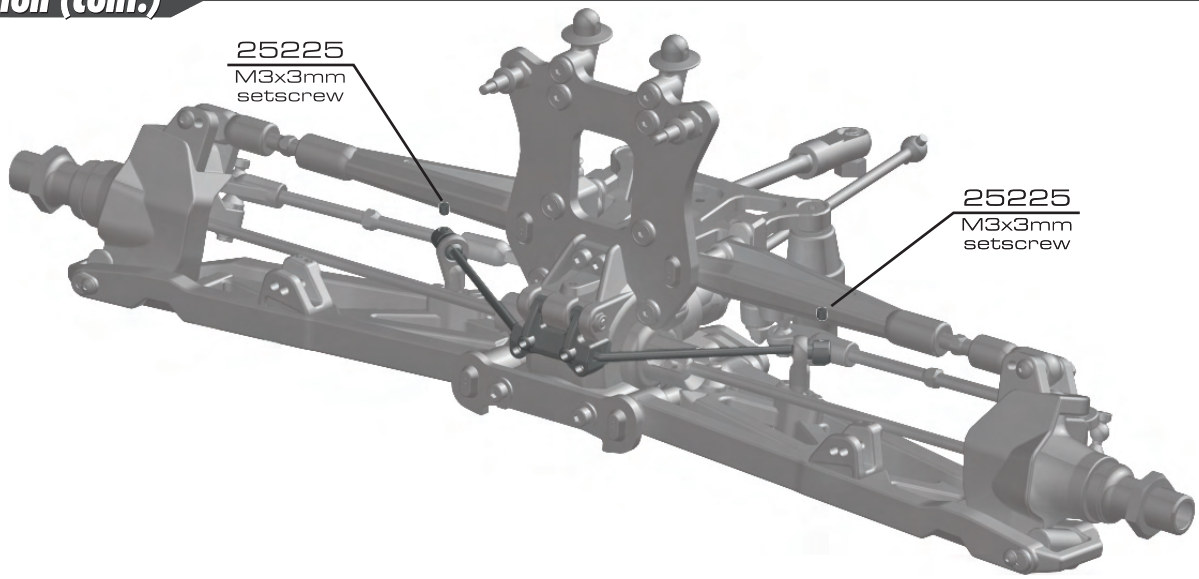

:: Suspension (cont.)

Bag F6

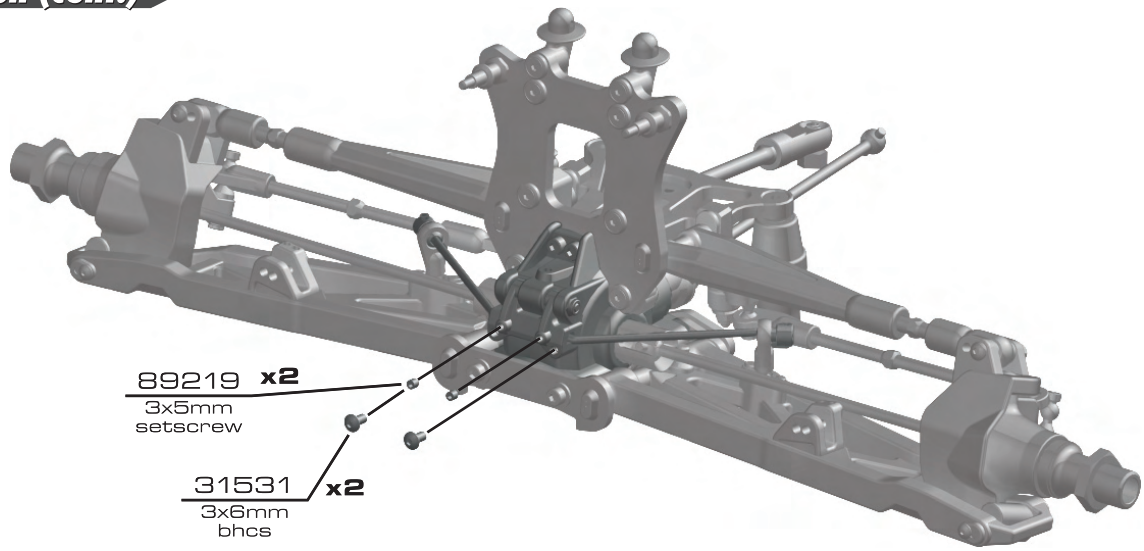

:: Suspension (cont.)

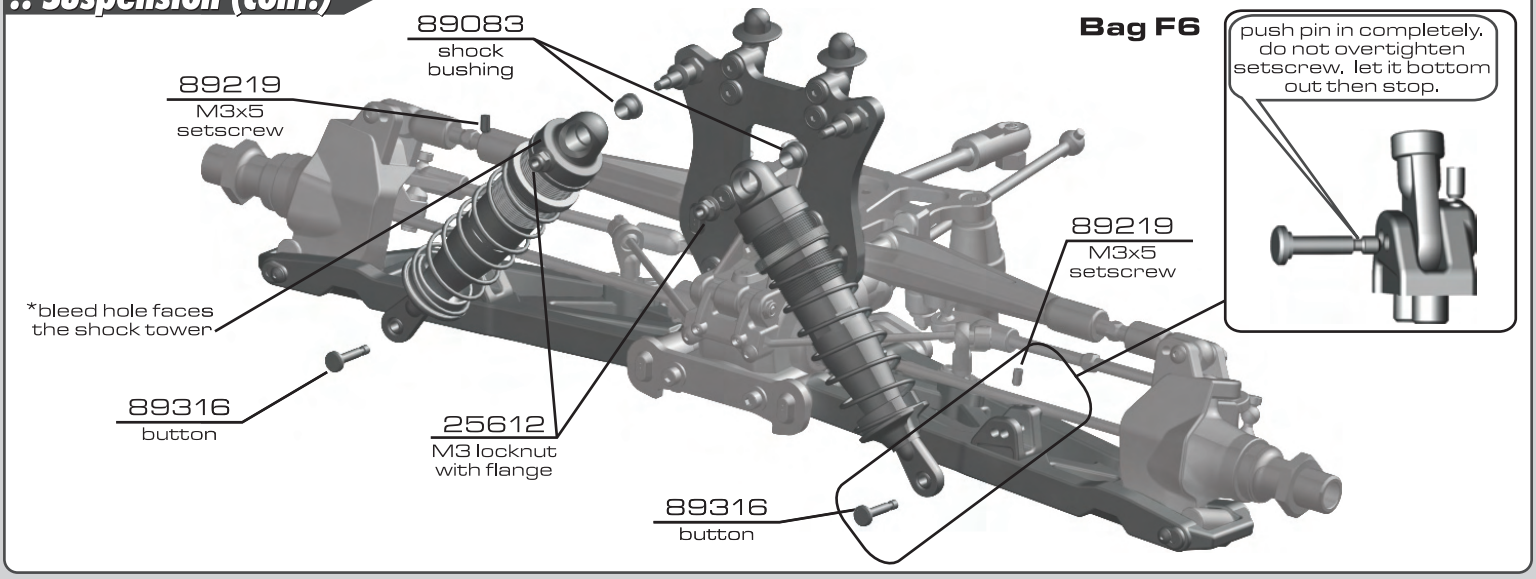

:: Center Diff

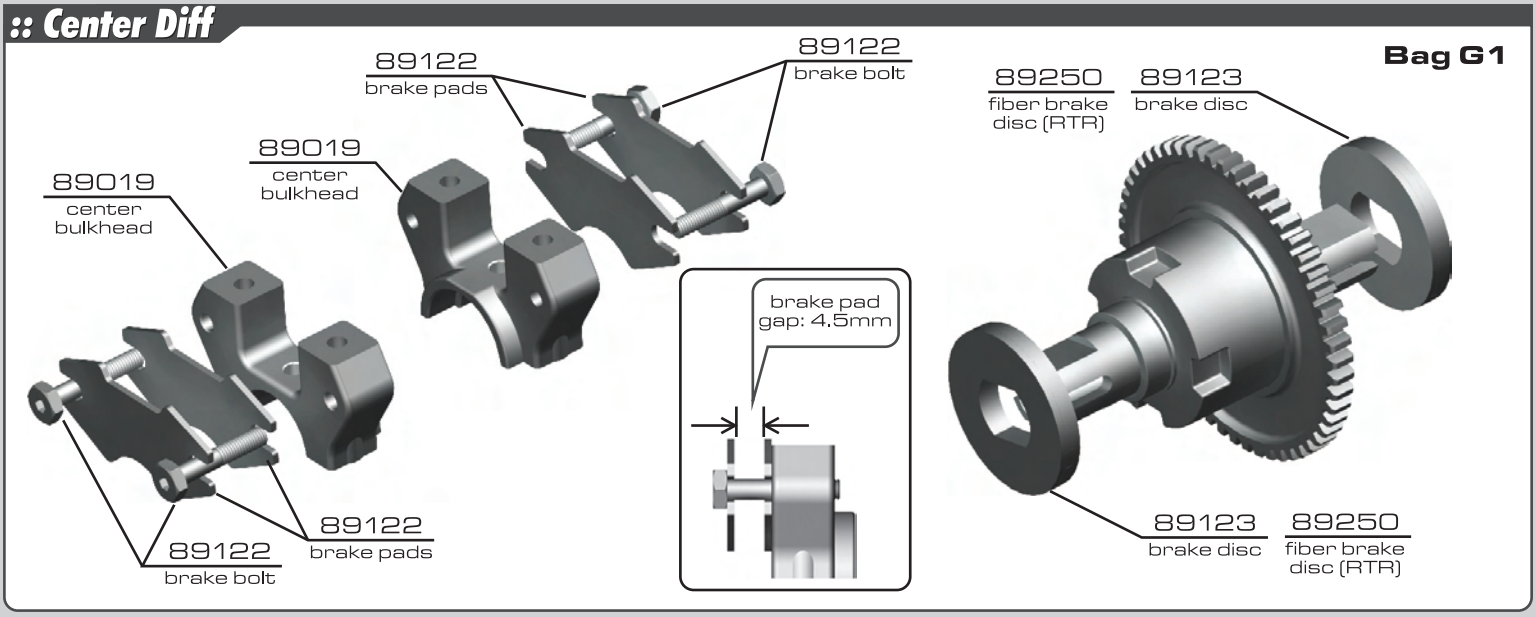

:: Center Diff

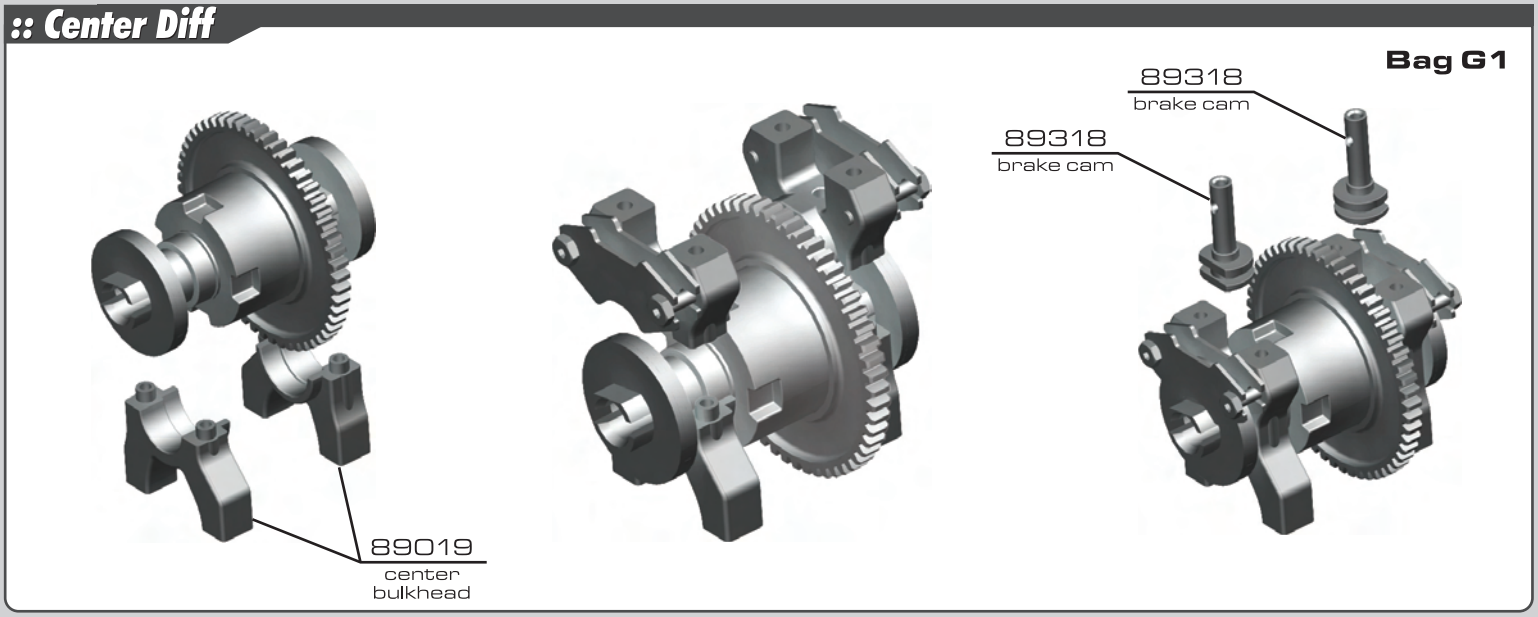

:: Center Diff (cont.)

Bag G1

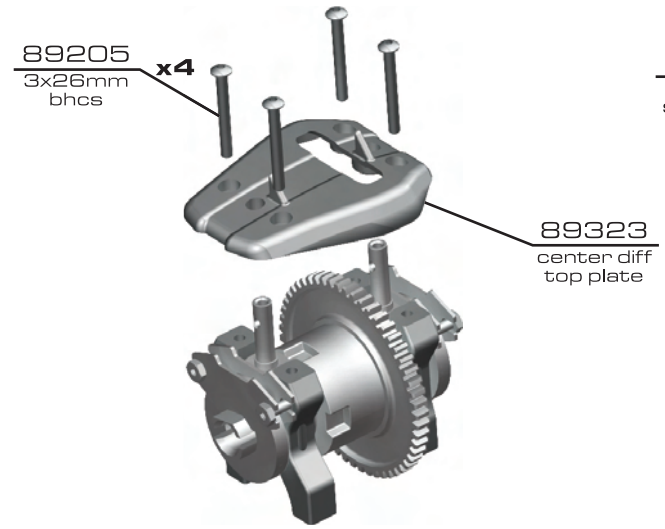

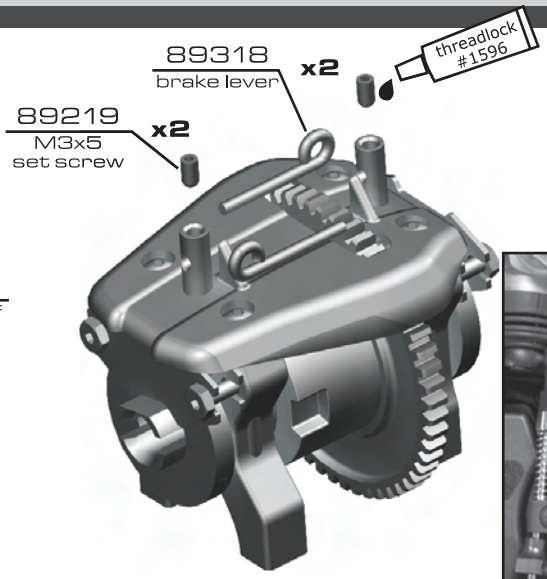

* after installation, leave a 0.5mm gap between the two brake levers

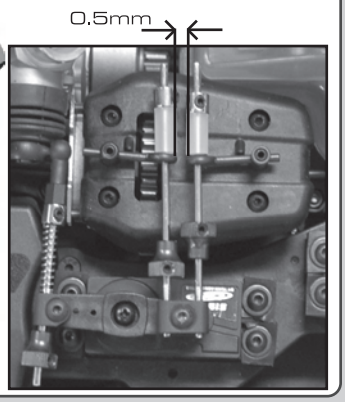

:: Rear Gearbox

Bag H1/H2

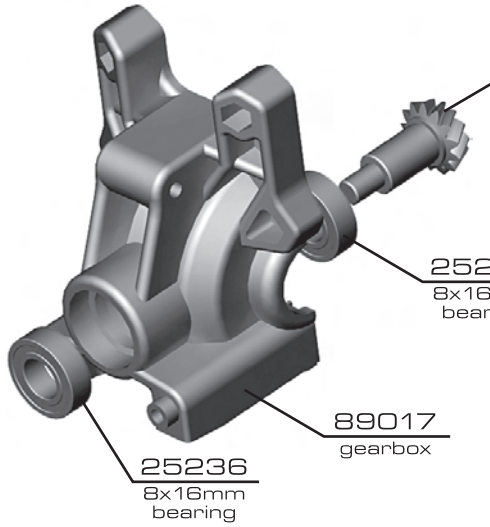

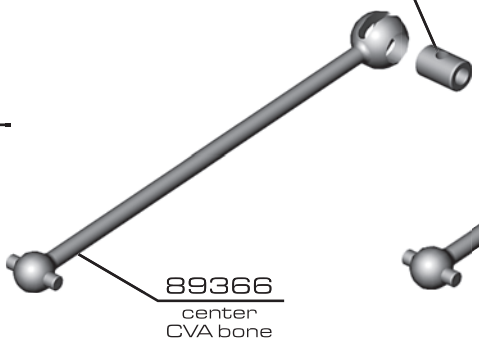

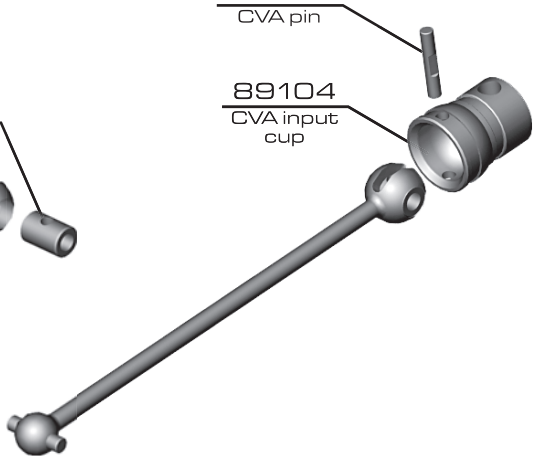

:: Rear Gearbox

Bag H2

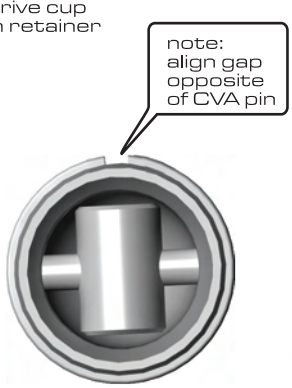

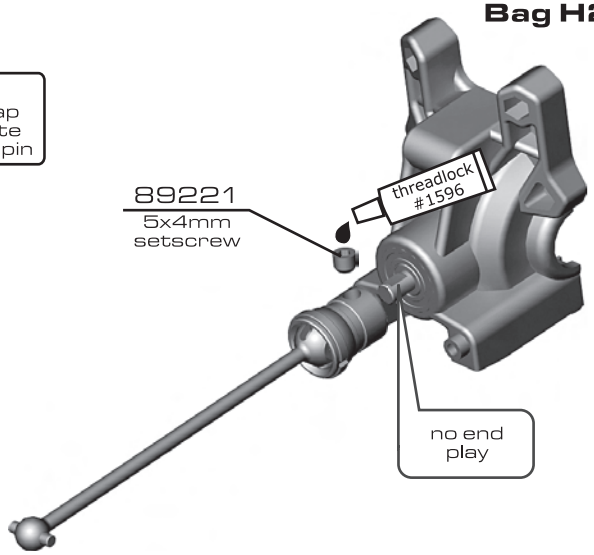

:: Rear Gearbox (cont.)

Bag H3

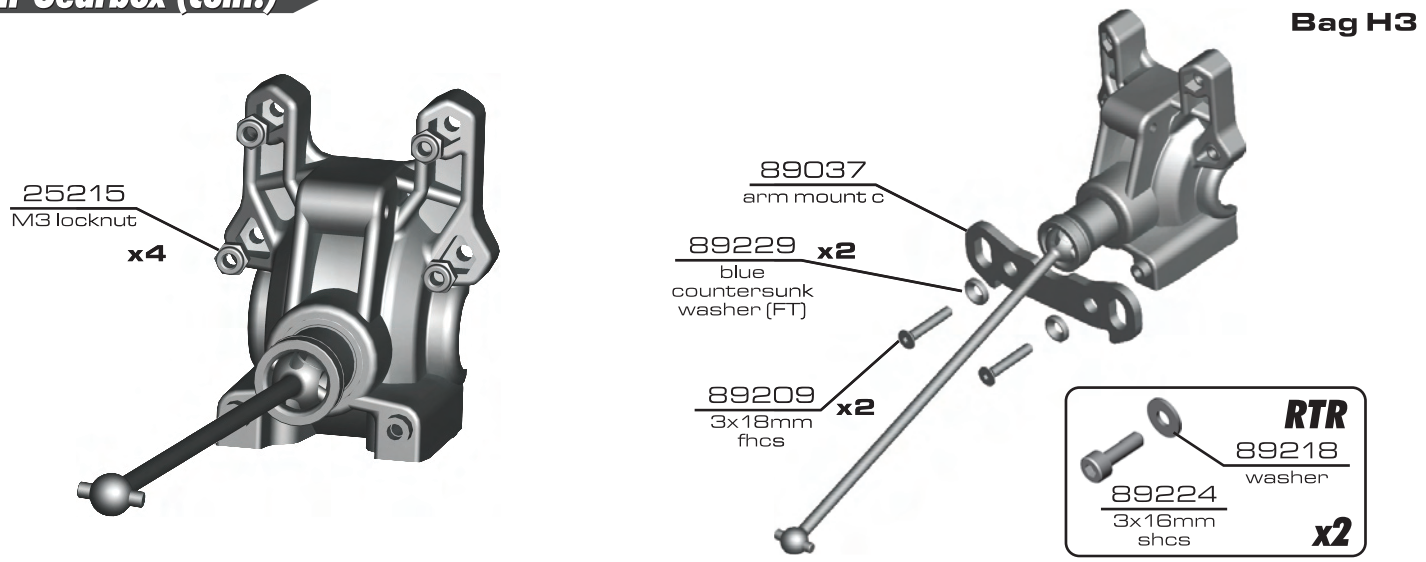

:: Rear Gearbox (cont.)

Bag H3

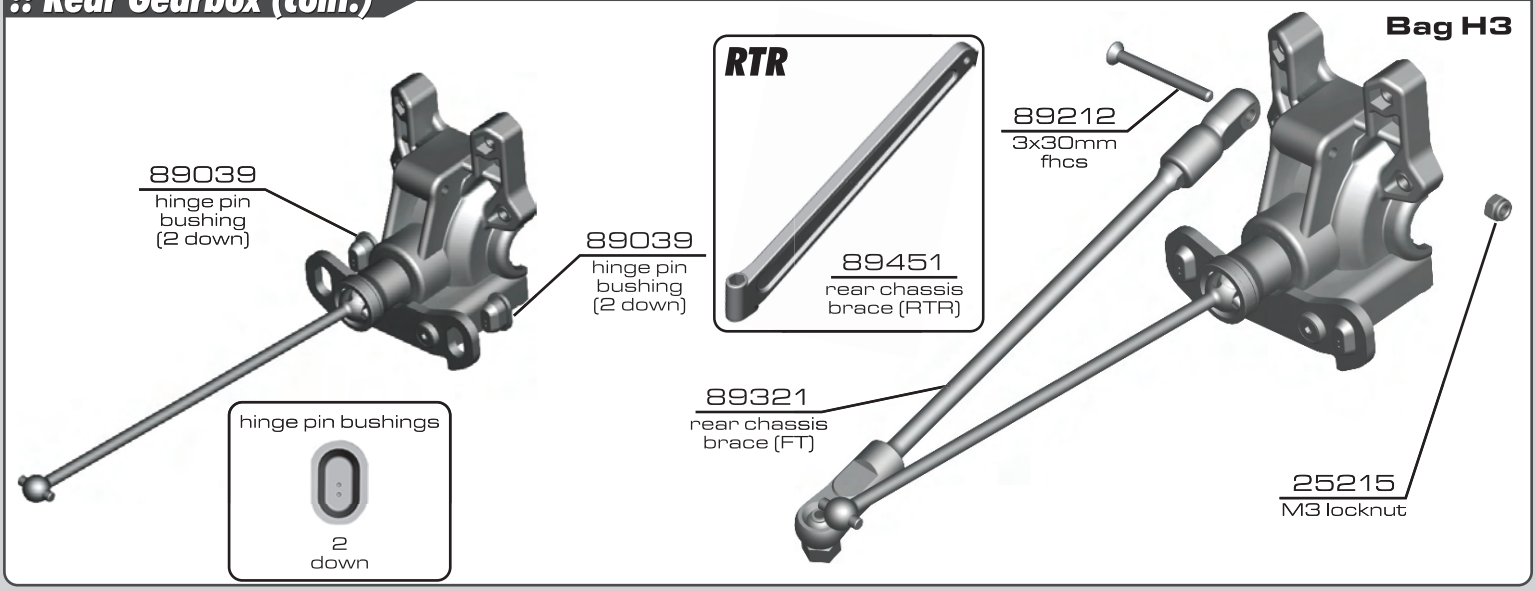

:: Rear Gearbox (cont.)

Bag H4

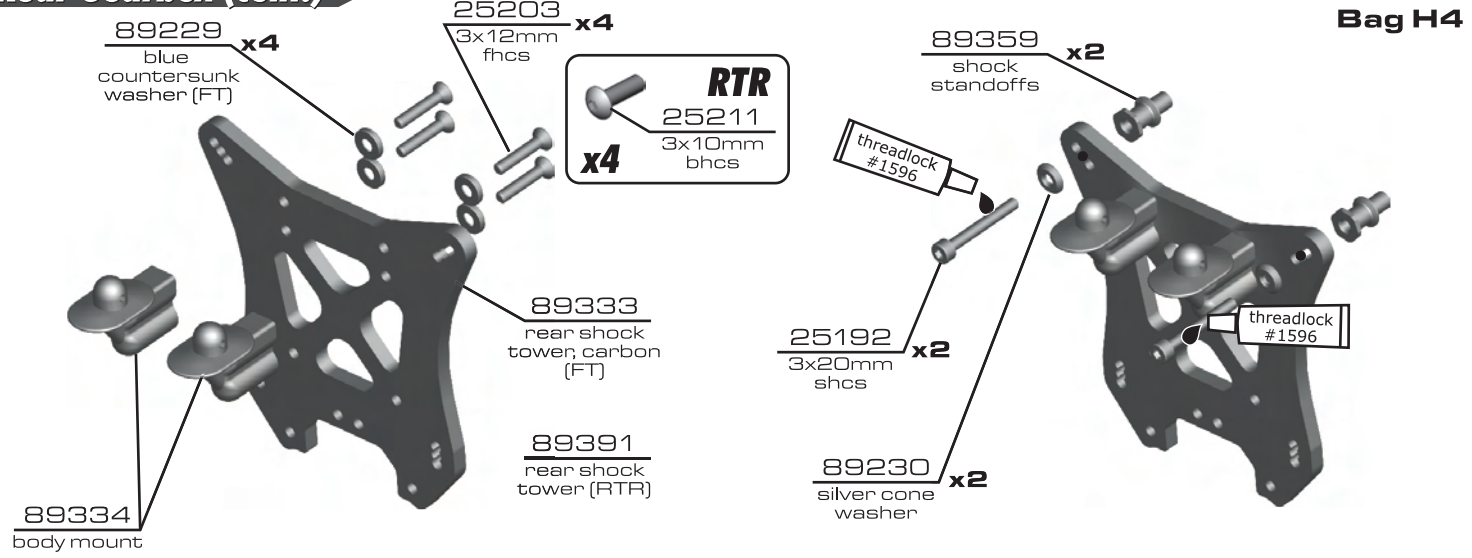

:: Rear Gearbox (cont.)

Bag H4

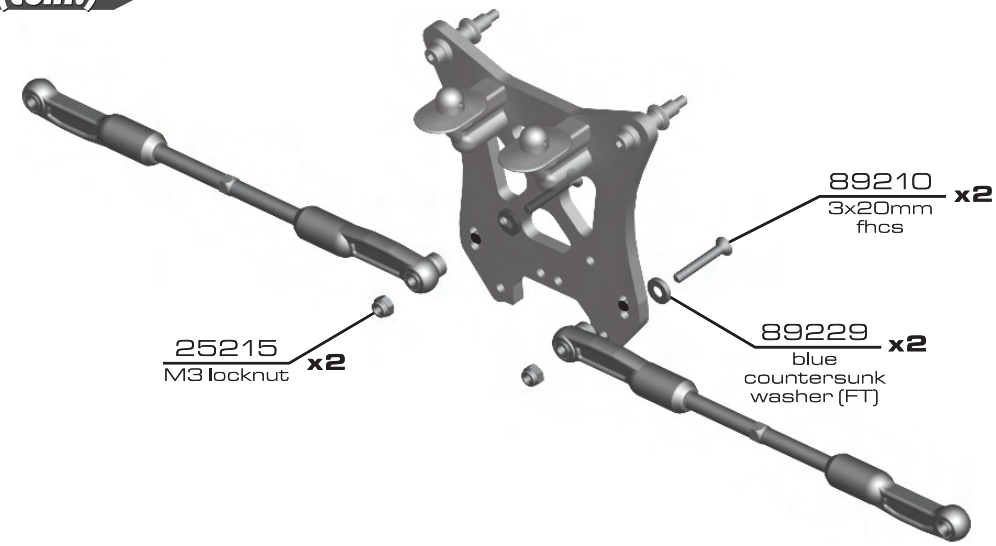

:: Rear Gearbox (cont.)

Bag H4

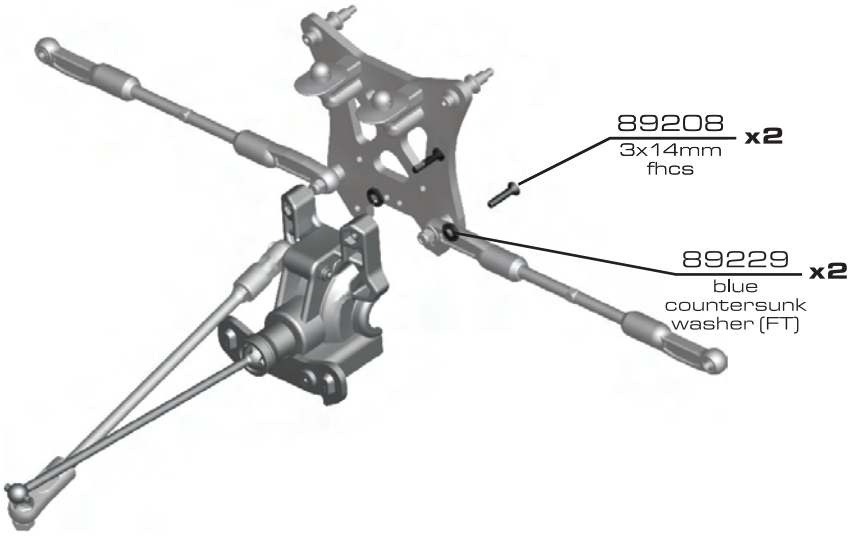

:: Rear Gearbox (cont.)

Bag H4

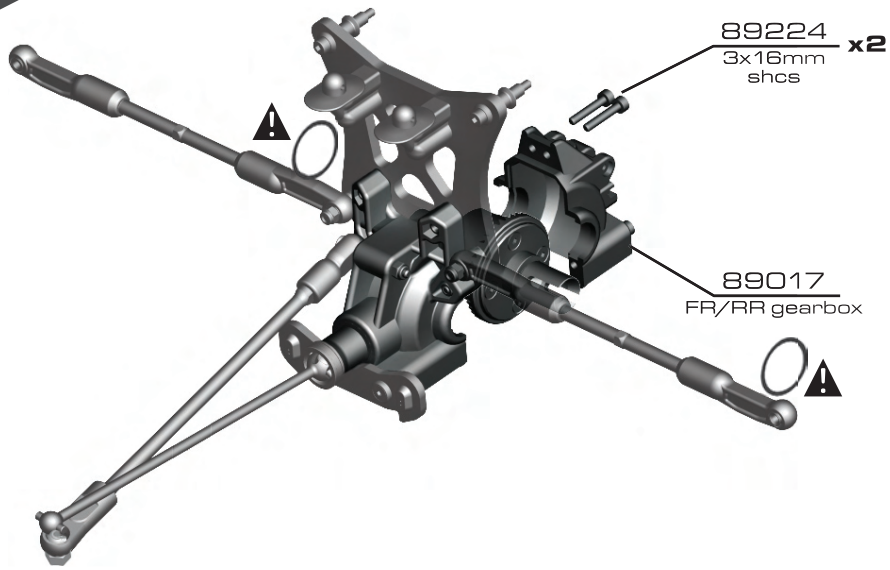

*remember to install the diff shims between the diff casing and bearings before inserting diff into the gearbox

:: Suspension

Bag I1

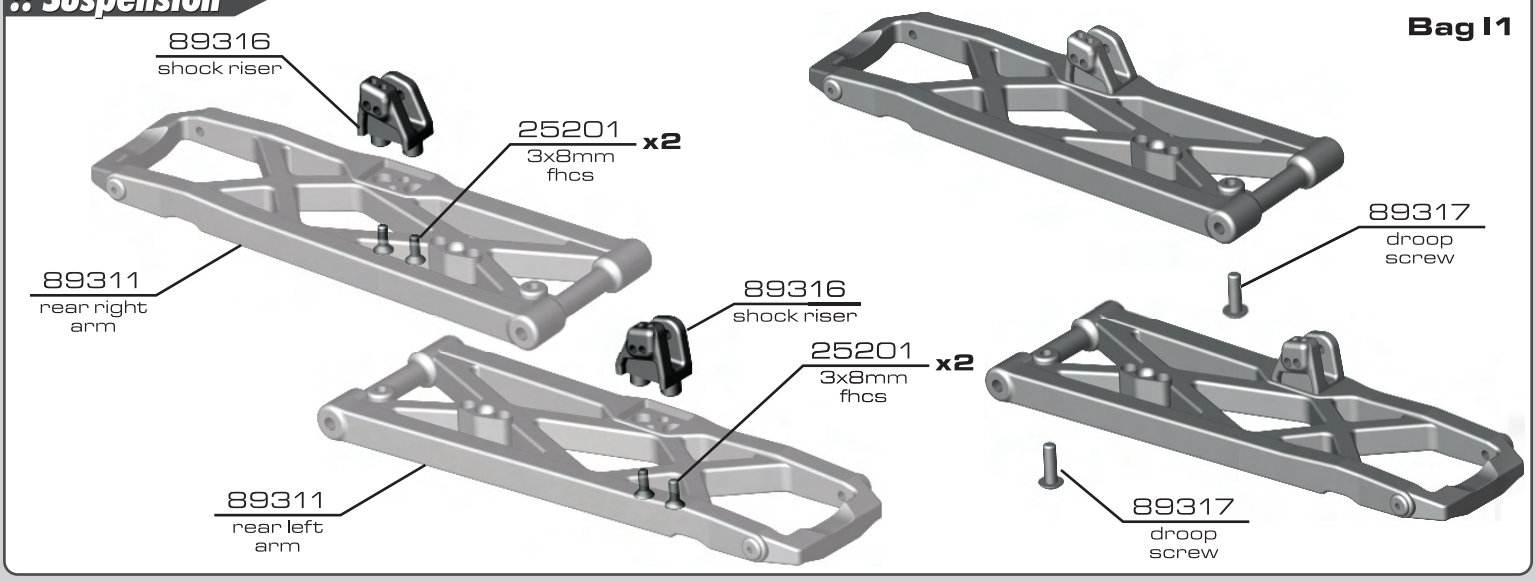

:: Suspension (cont.)

Bag I1

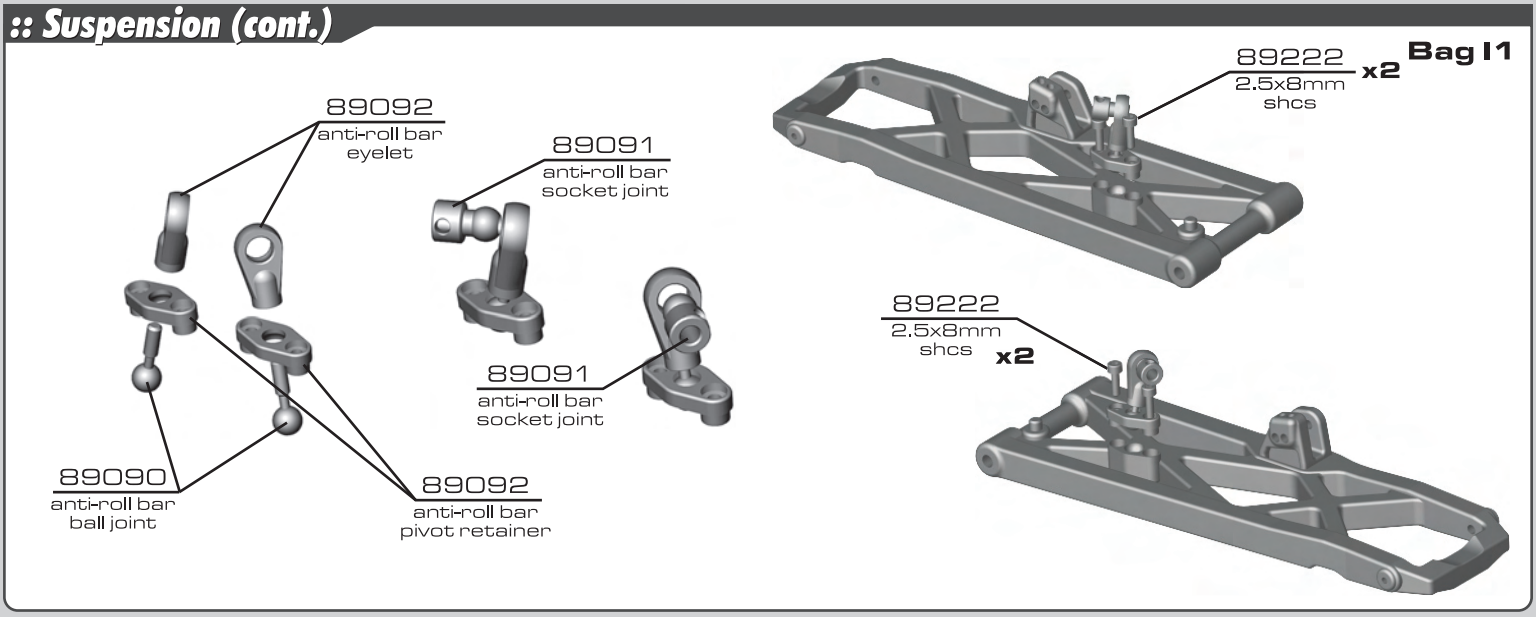

:: Suspension (cont.)

Bag I2/I3

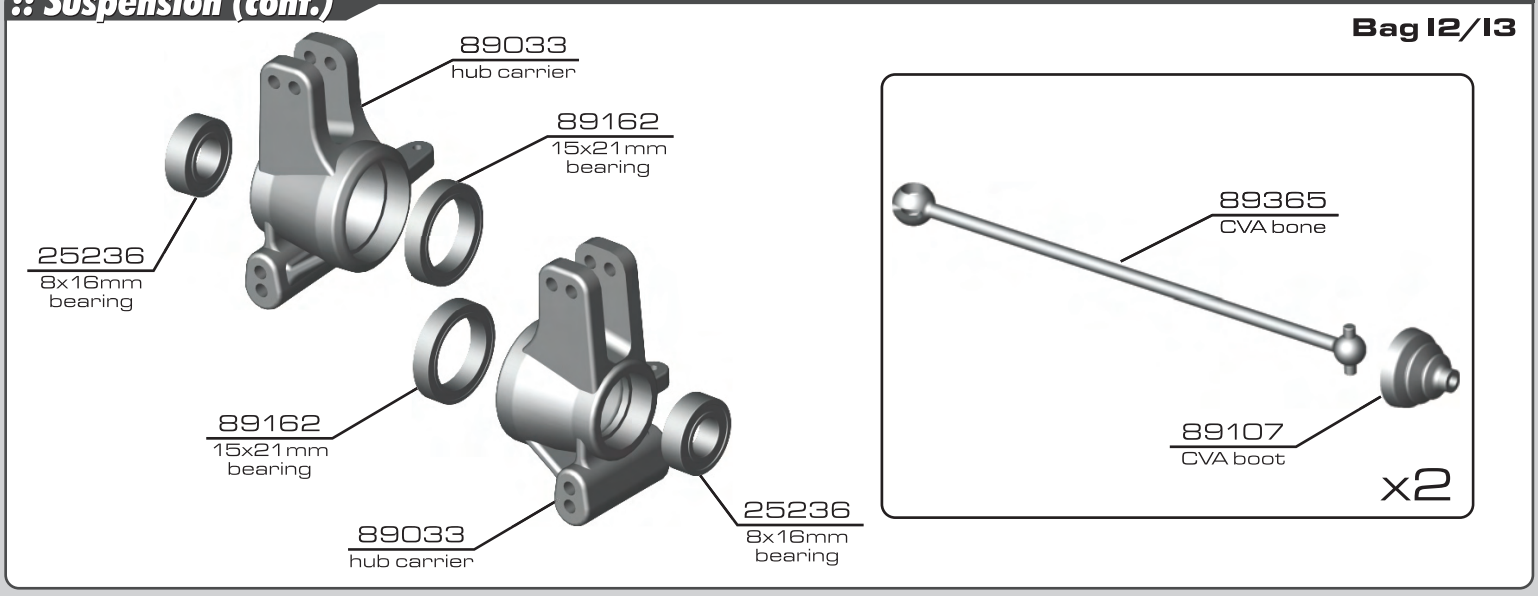

:: Suspension (cont.)

Bag I3

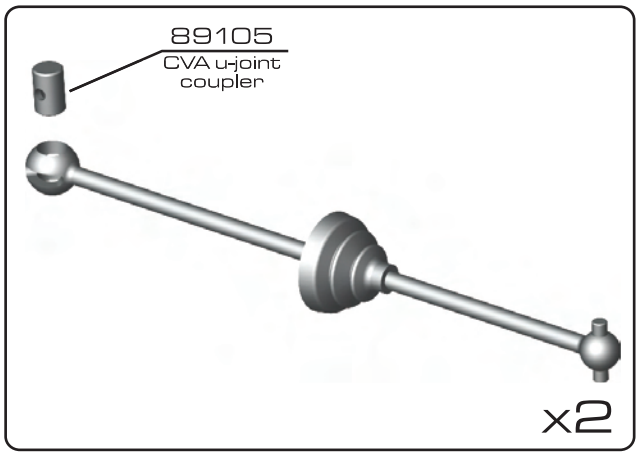

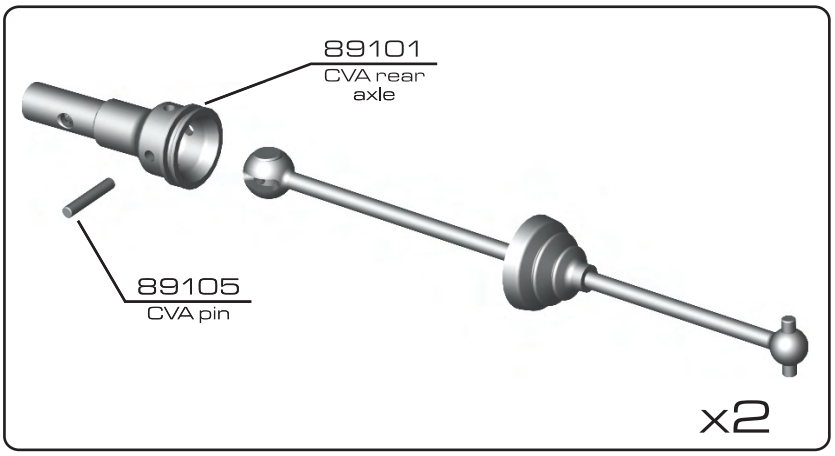

:: Suspension (cont.)

Bag I3

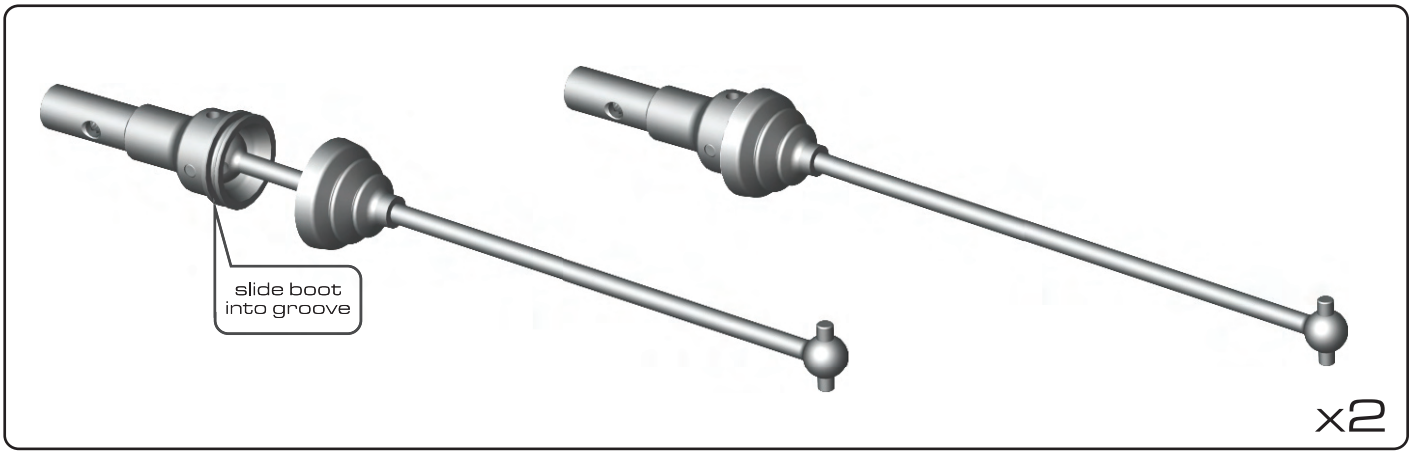

:: Suspension (cont.)

Bag I3

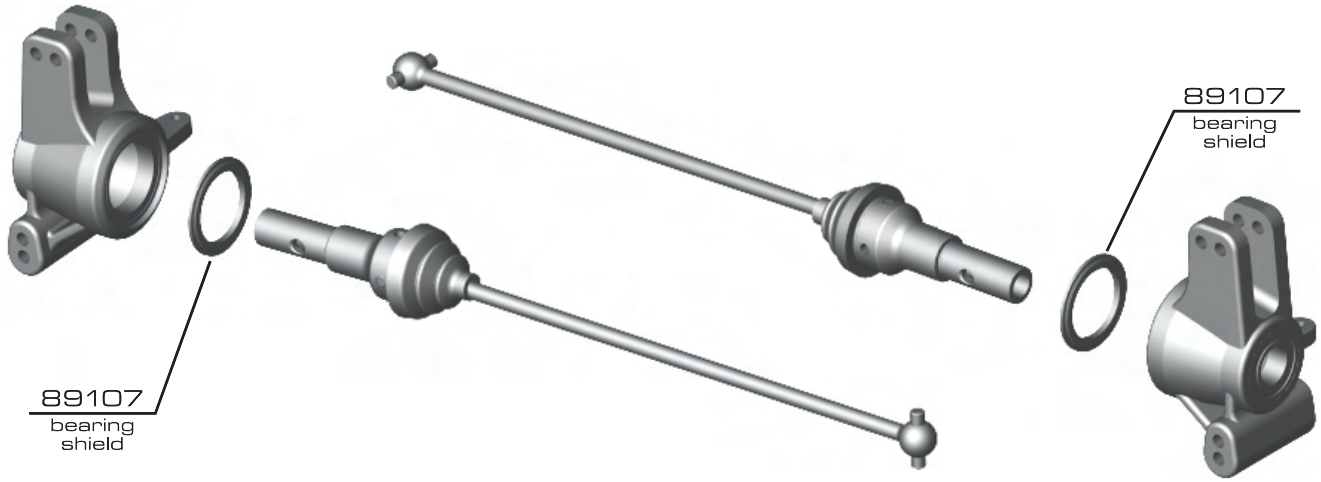

:: Suspension (cont.)

Bag I3

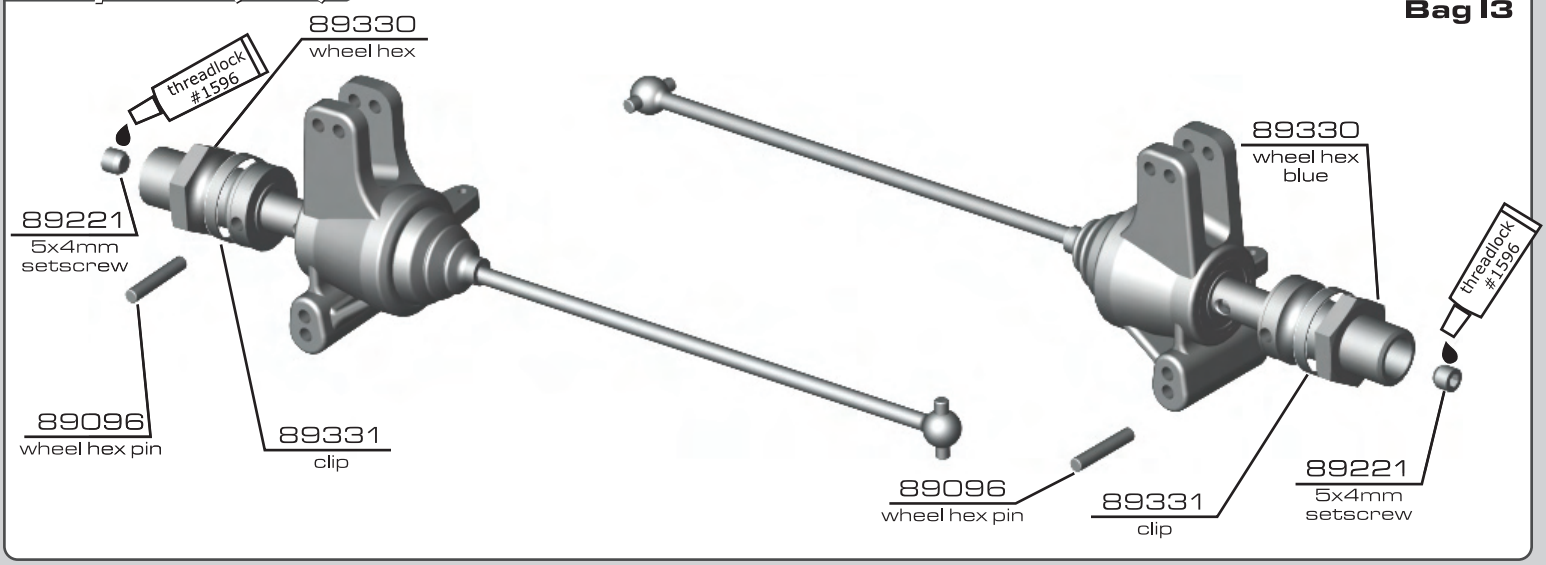

:: Suspension (cont.)

Bag I4

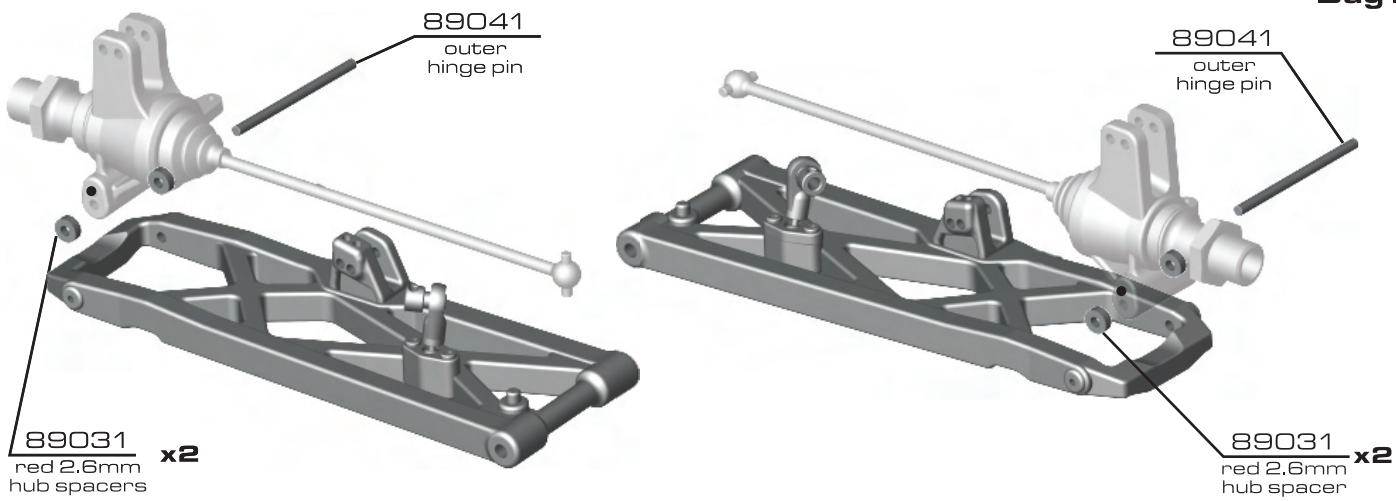

:: Suspension (cont.)

Bag I4

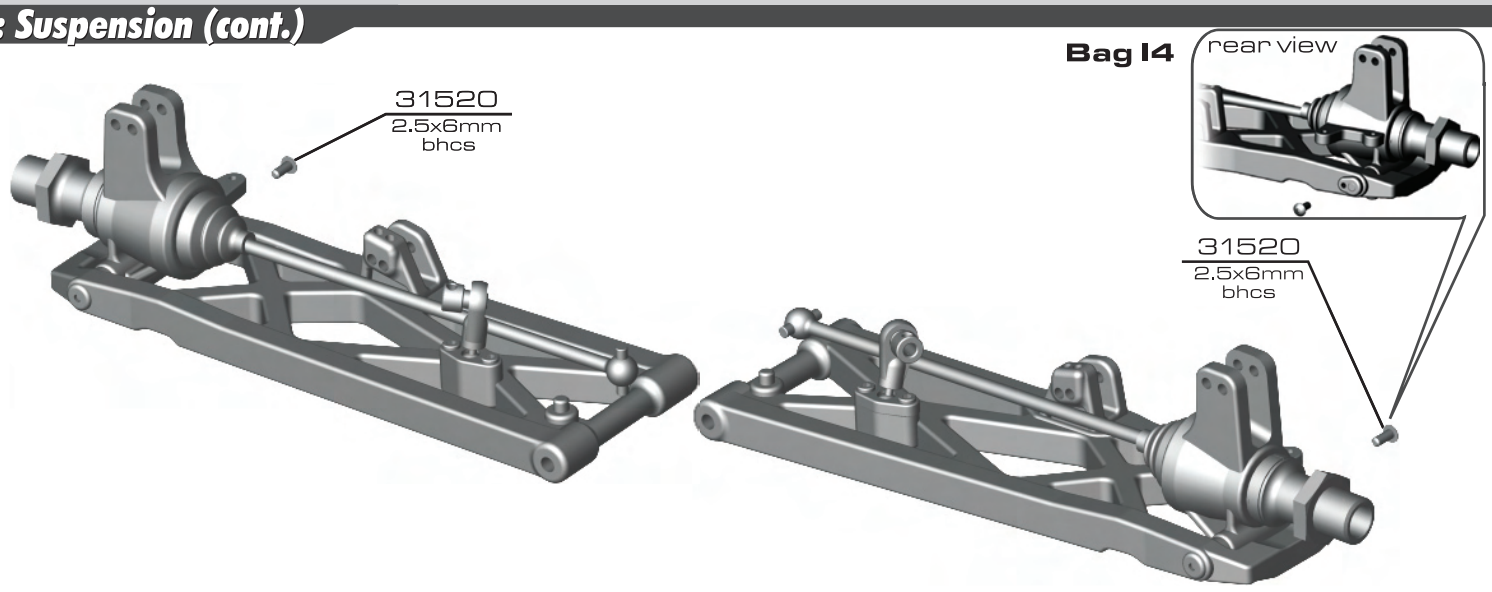

:: Suspension (cont.)

Bag I4

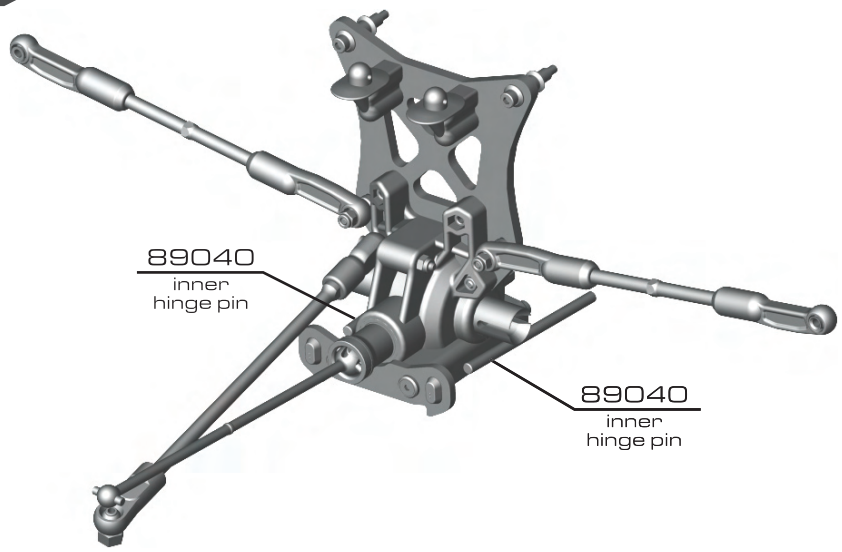

:: Suspension (cont.)

Bag I4

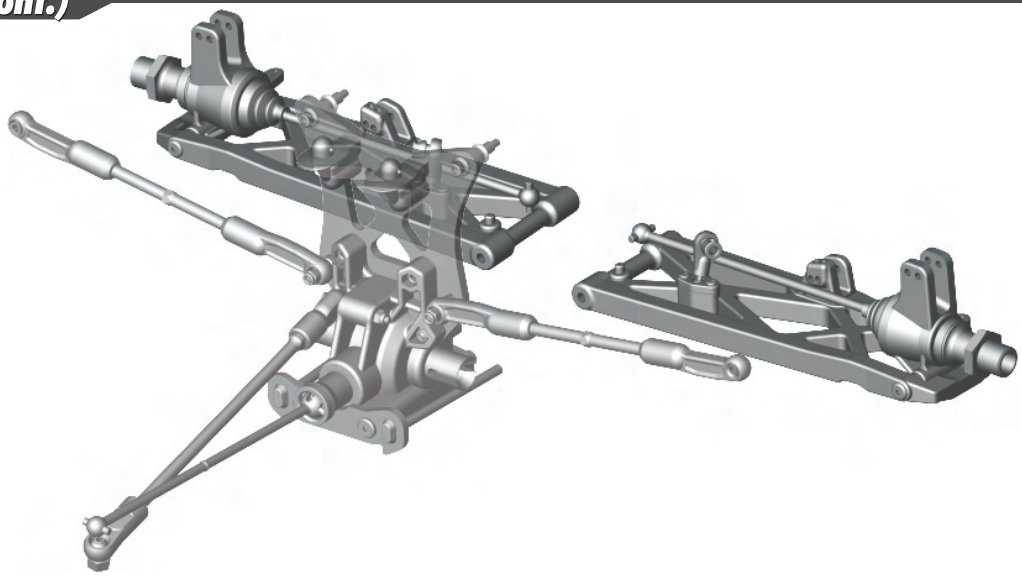

:: Suspension (cont.)

Bag I4

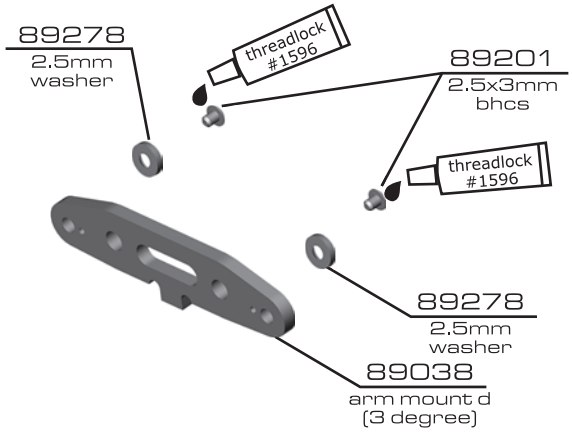

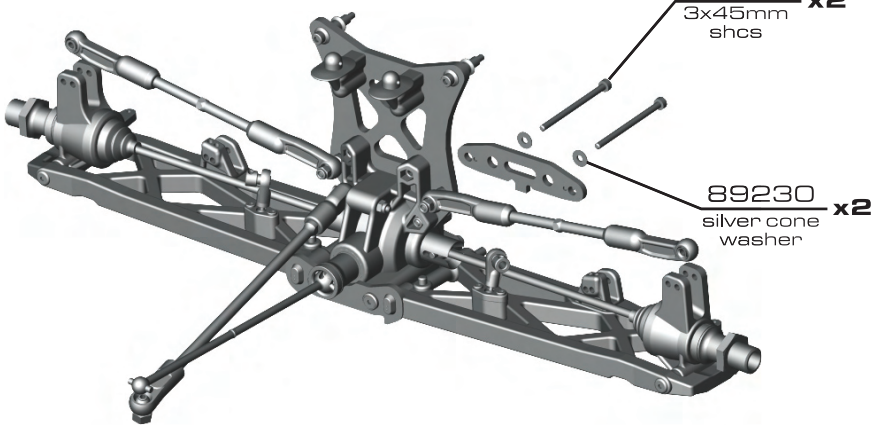

:: Suspension (cont.)

Bag I4

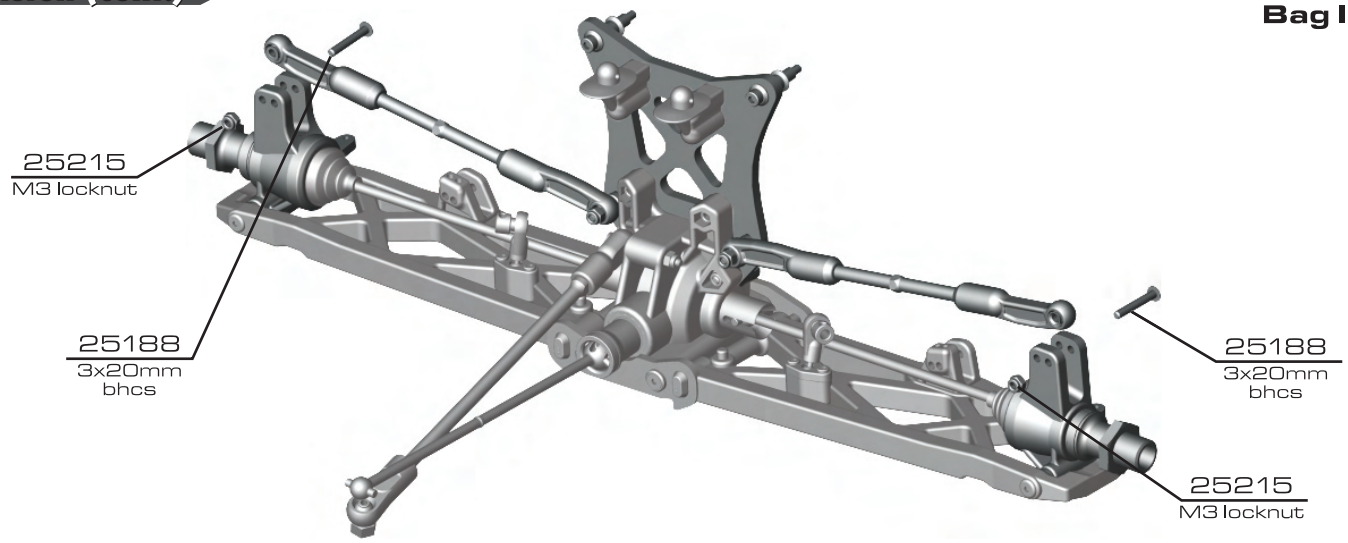

:: Suspension (cont.)

Bag I5

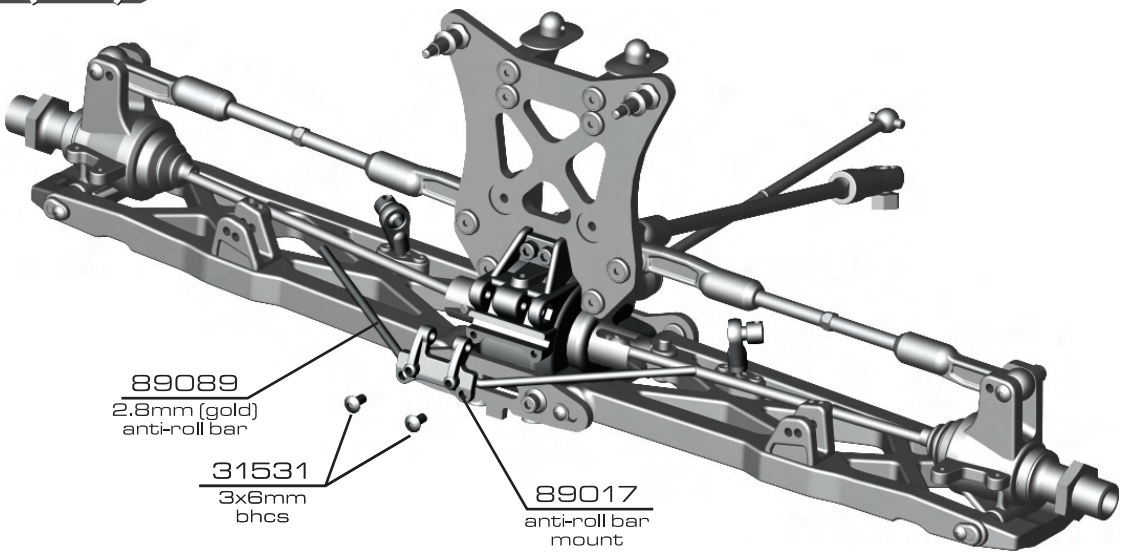

:: Suspension (cont.)

Bag I5

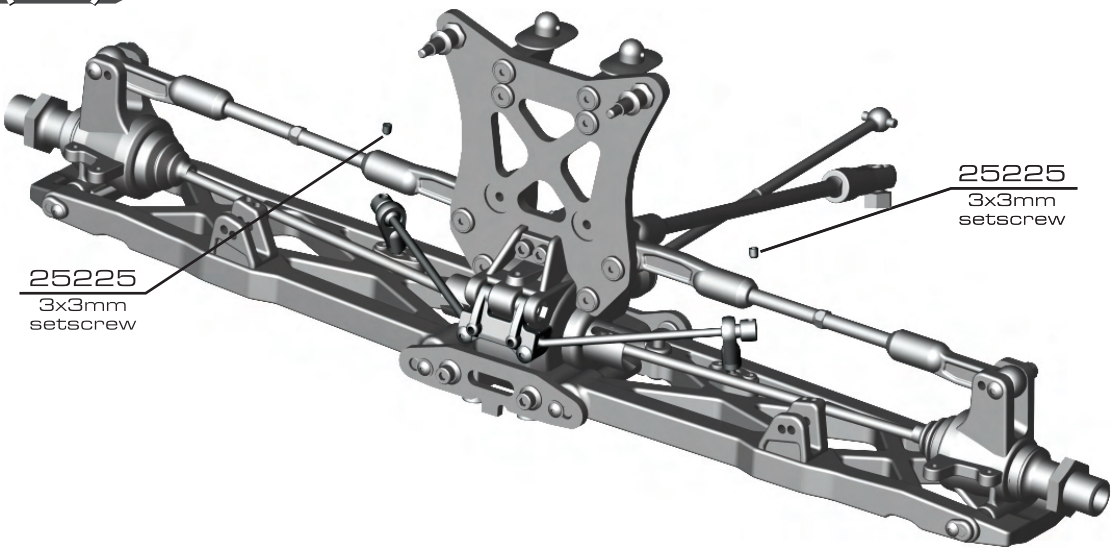

:: Suspension (cont.)

Bag I5

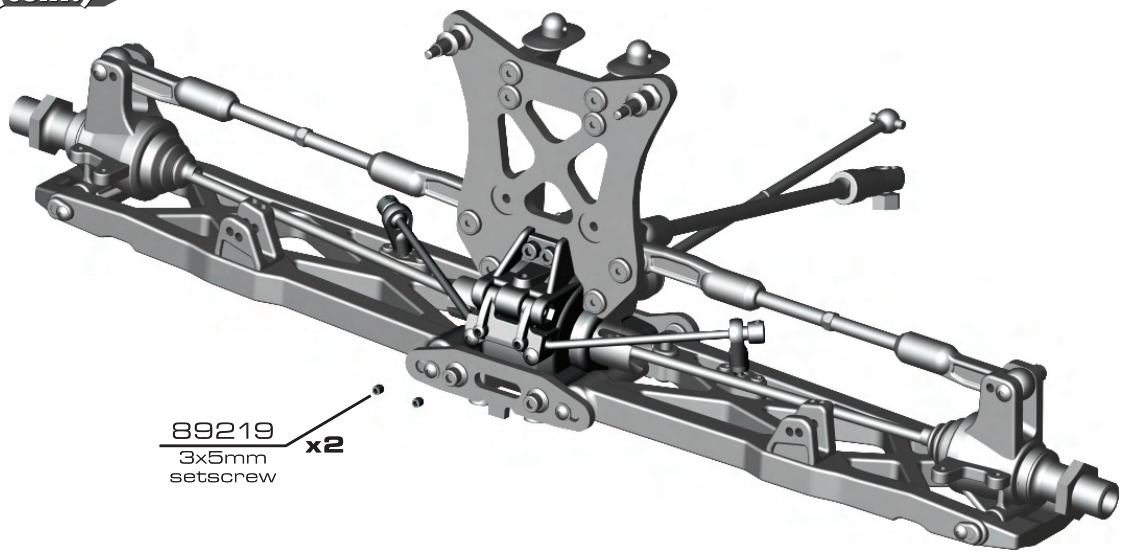

:: Suspension (cont.)

Bag I5

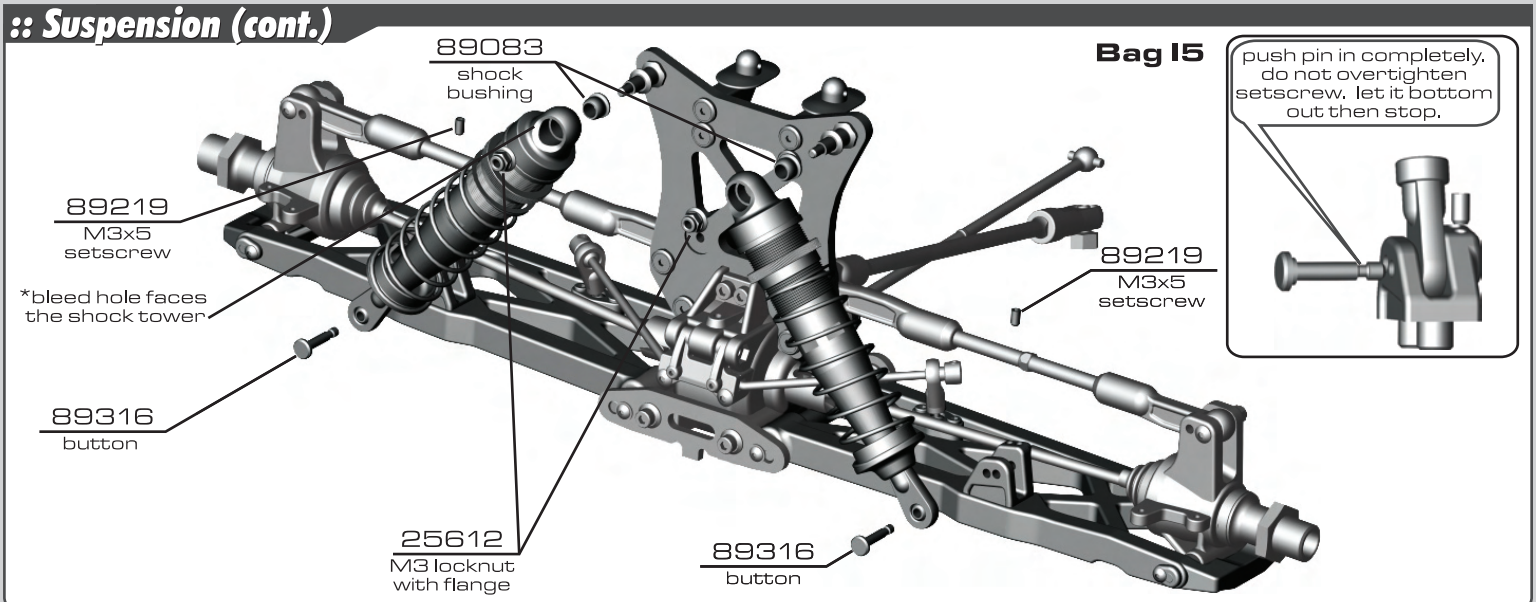

:: Wing

Bag J1

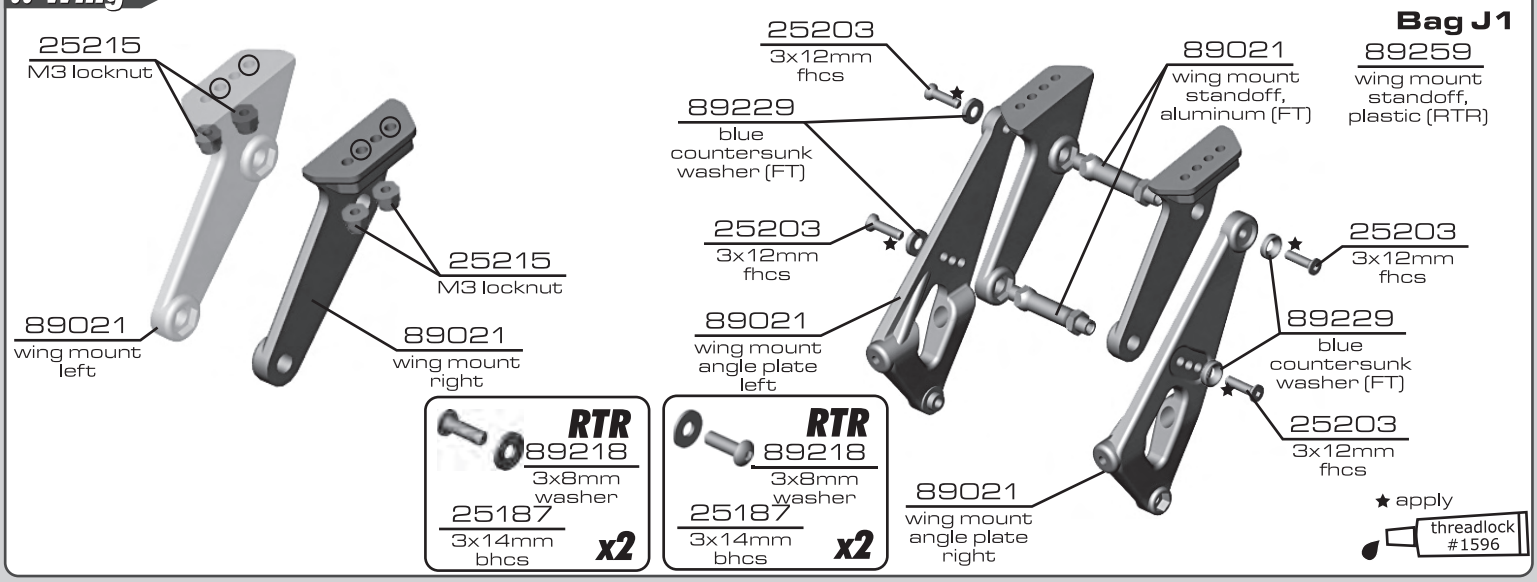

:: Wing (cont.)

Bag J2

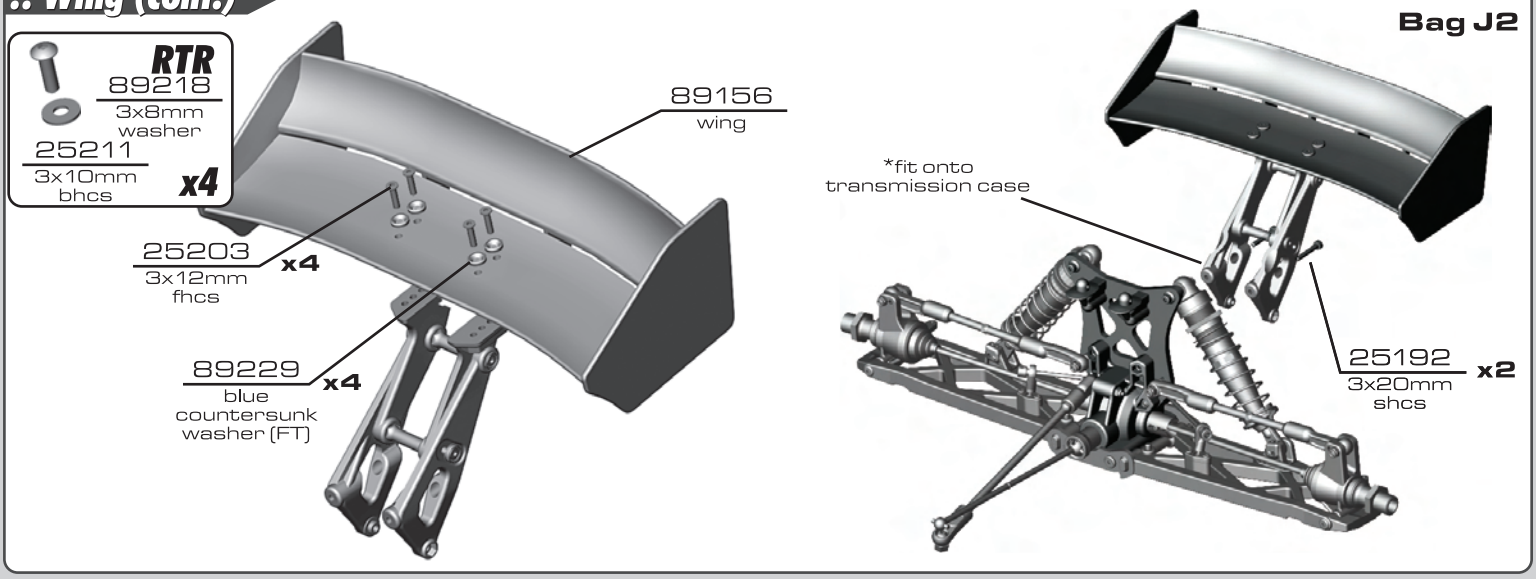

:: Wing (cont.)

Bag J2

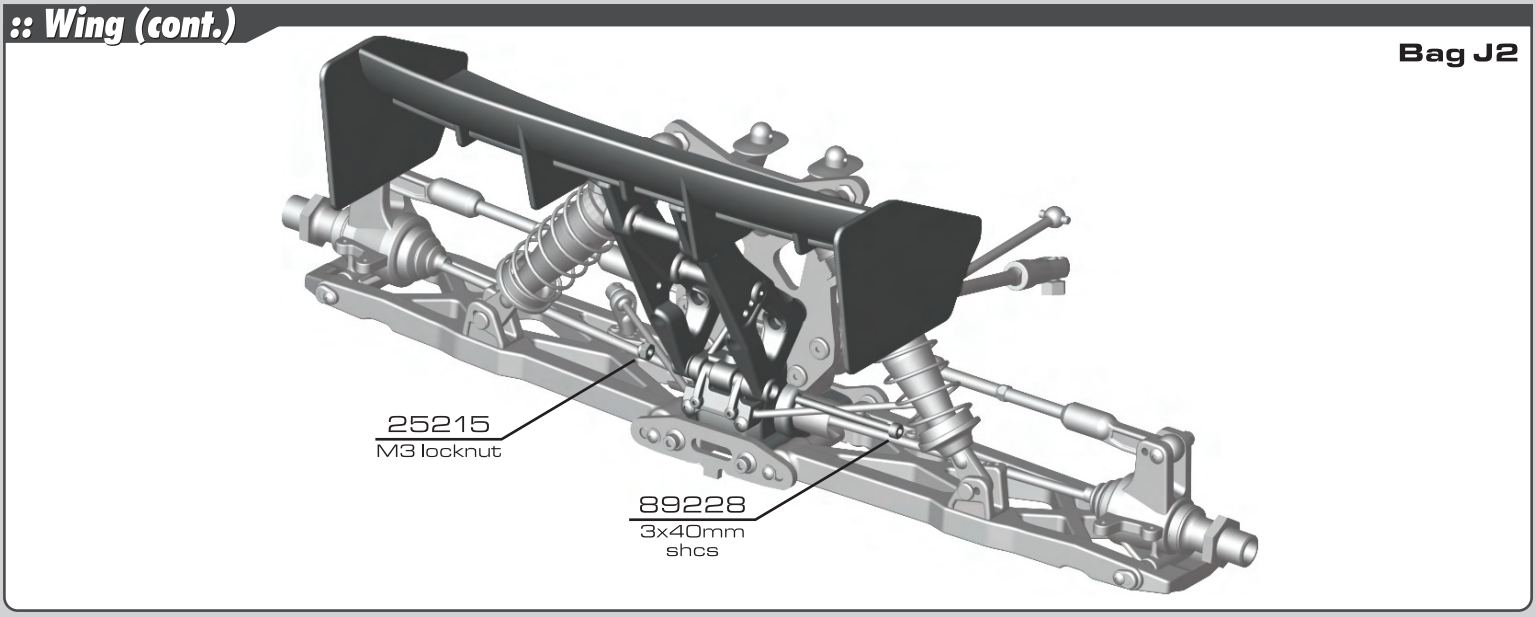

:: Chassis Assembly

Bag K1

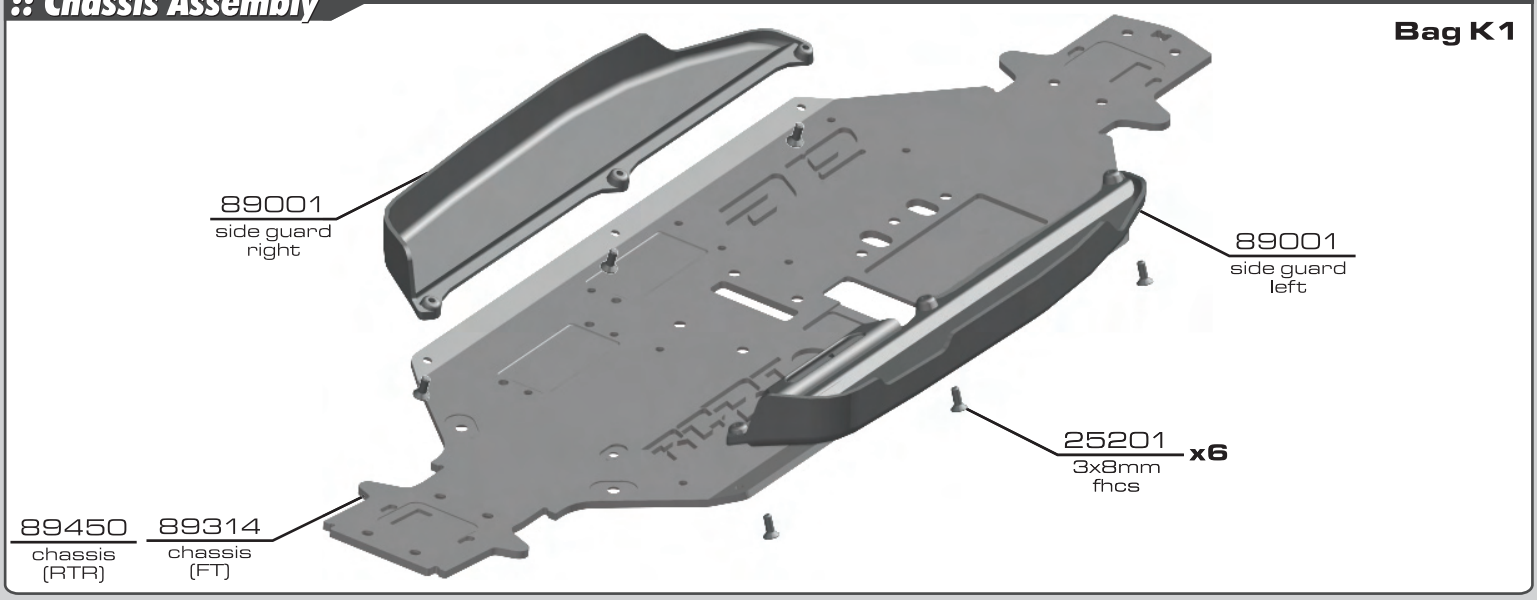

:: Chassis Assembly (cont.)

Bag K2

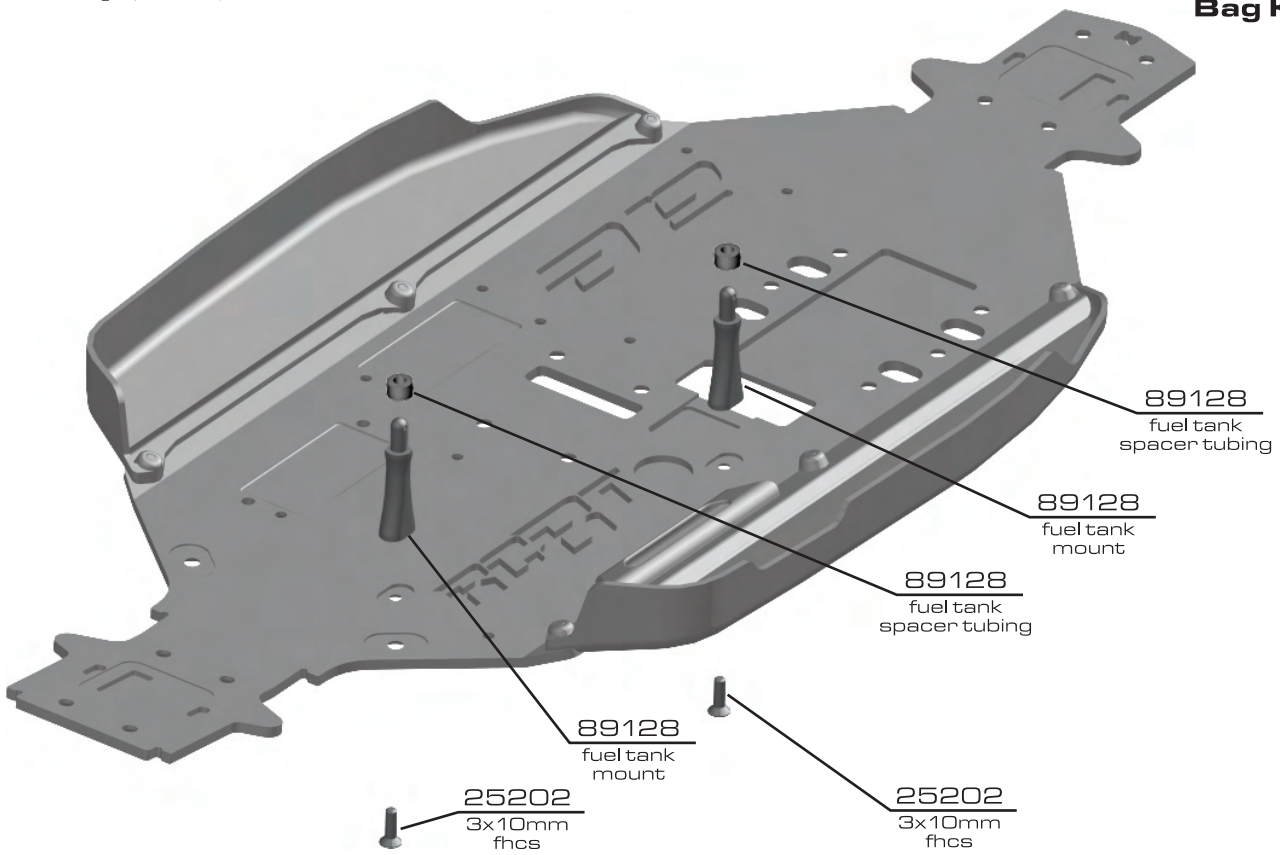

:: Chassis Assembly (cont.)

Bag K3

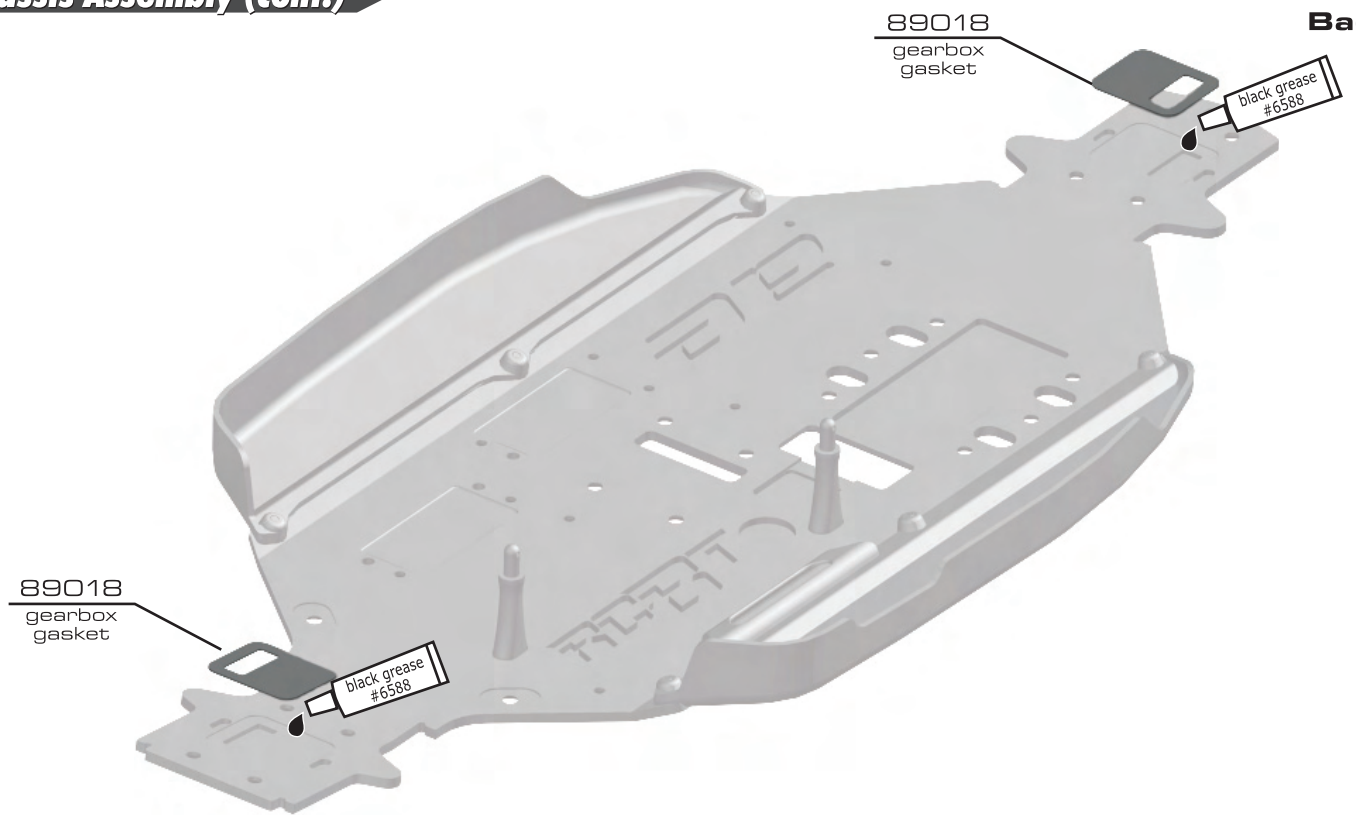

:: Chassis Assembly (cont.)

Bag K3

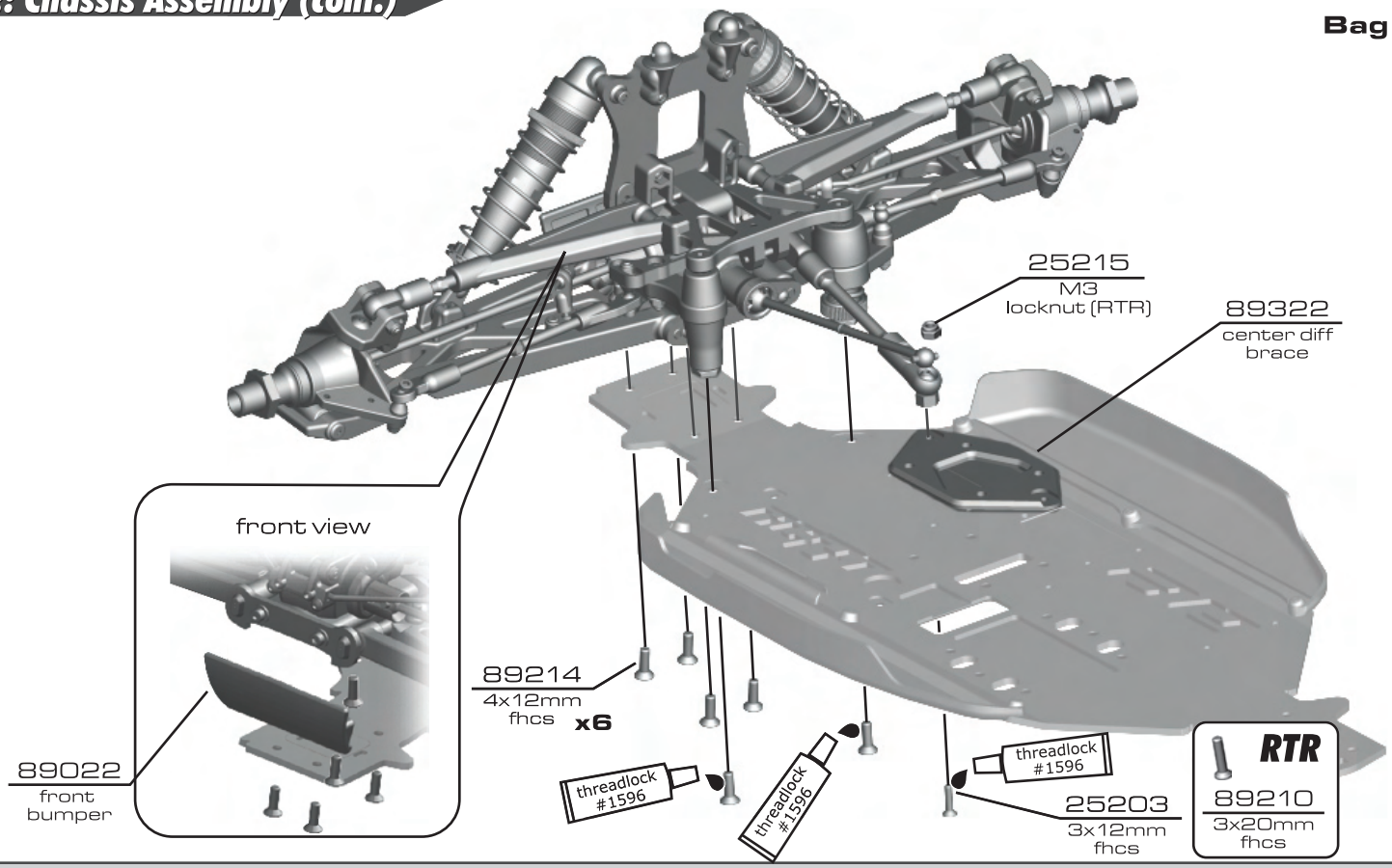

:: Chassis Assembly (cont.)

Bag K3

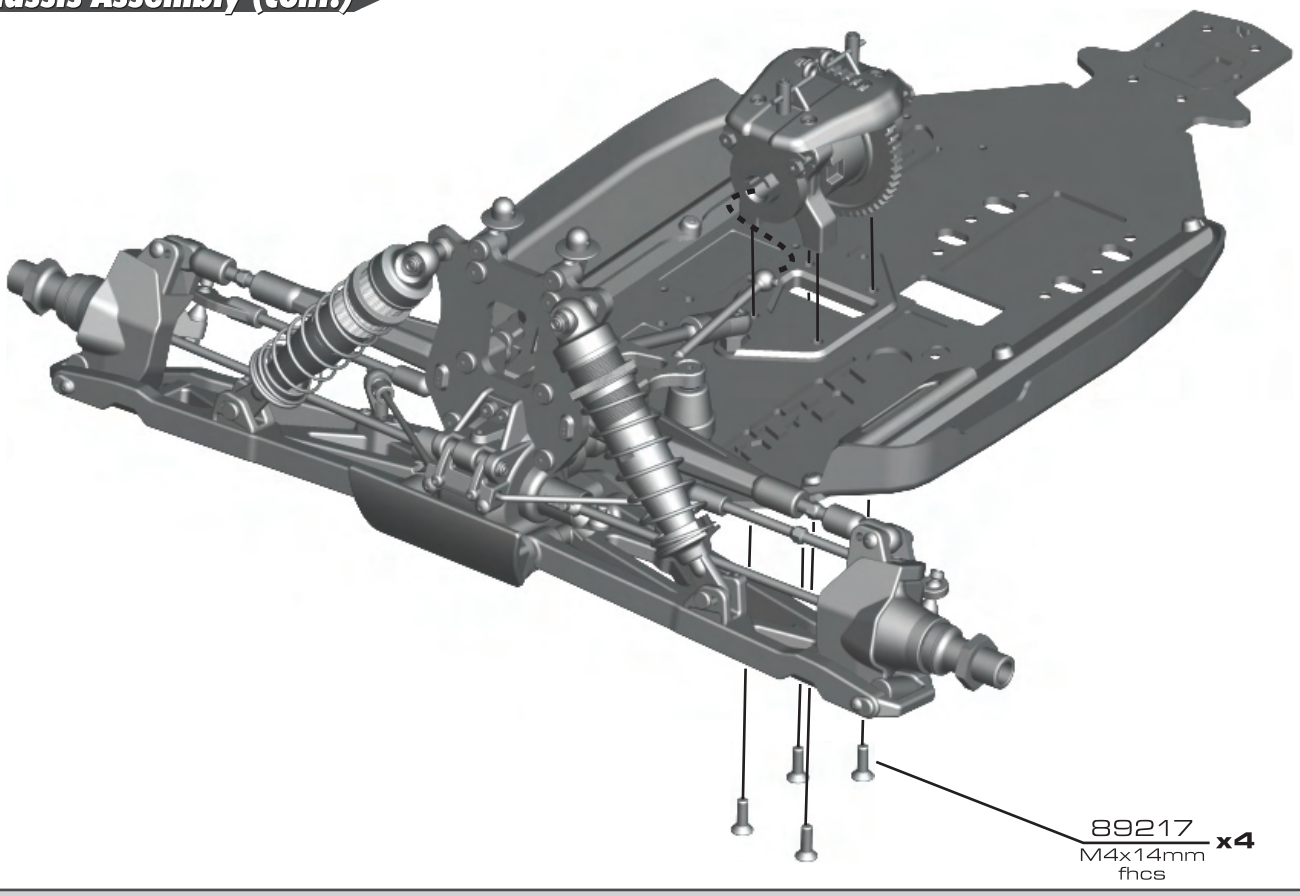

:: Chassis Assembly (cont.)

Bag K3

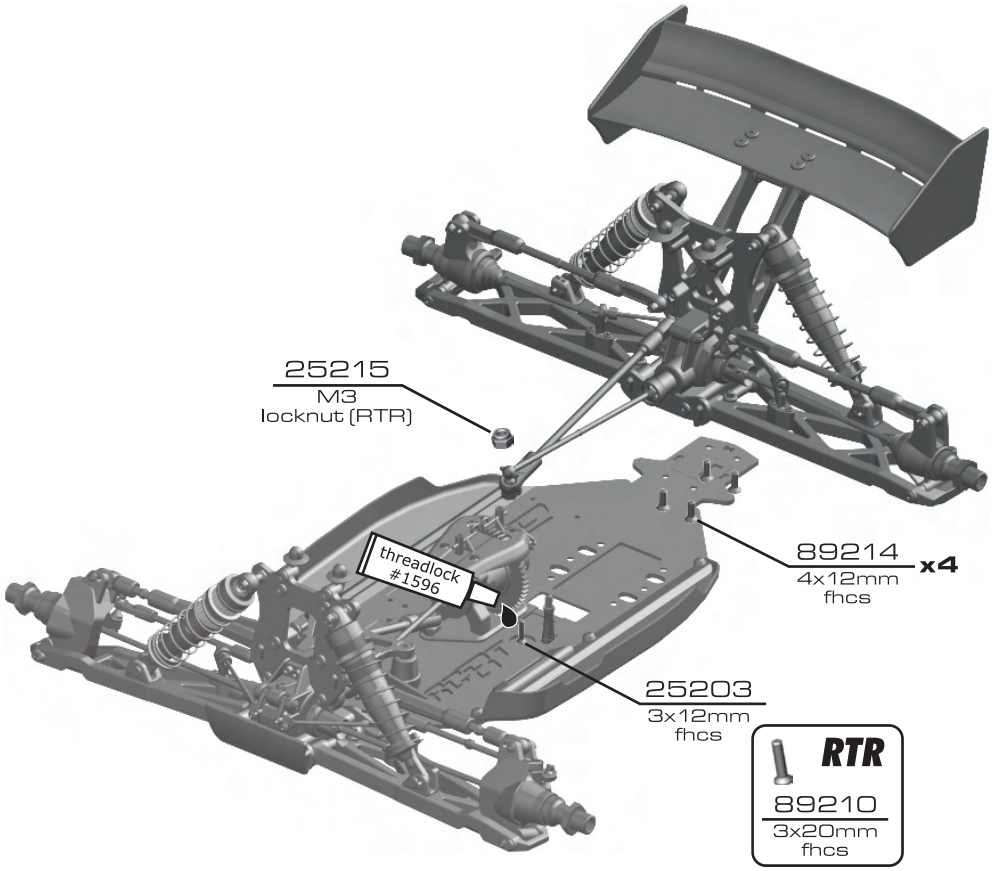

:: Chassis Assembly (cont.)

Bag K4

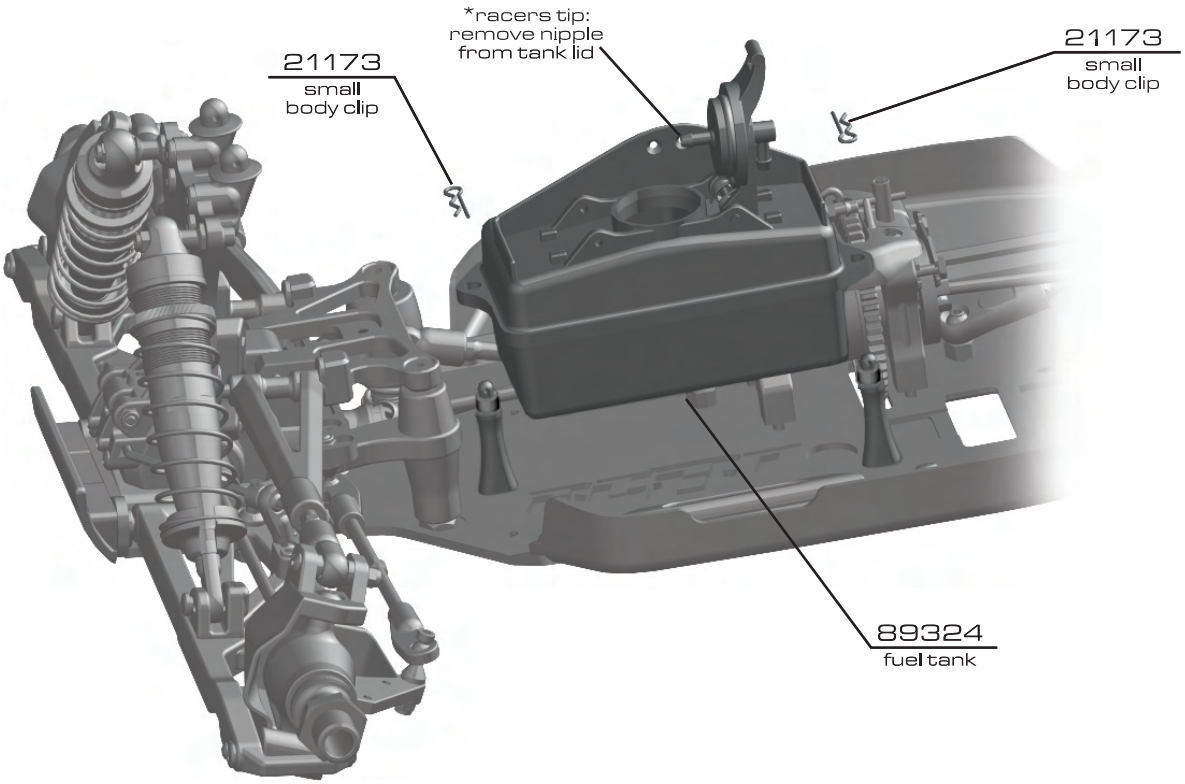

:: Chassis Assembly (cont.)

Bag K5

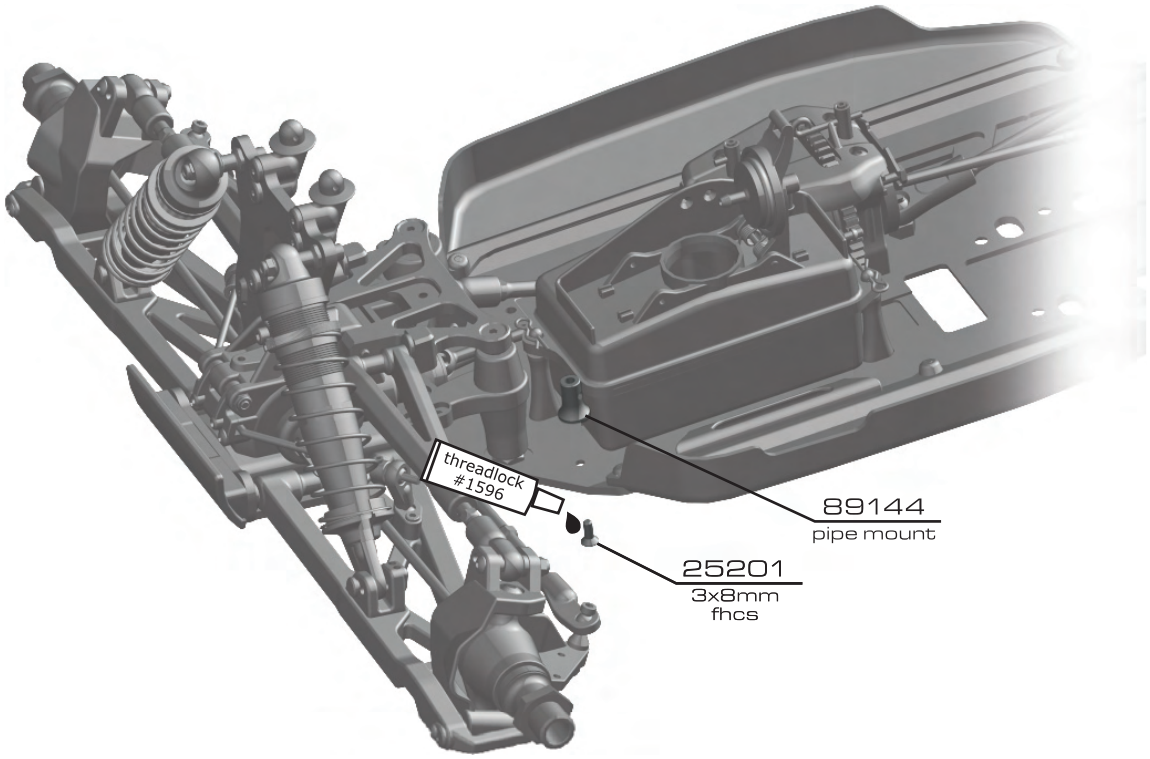

:: Chassis Assembly (cont.)

Bag K5

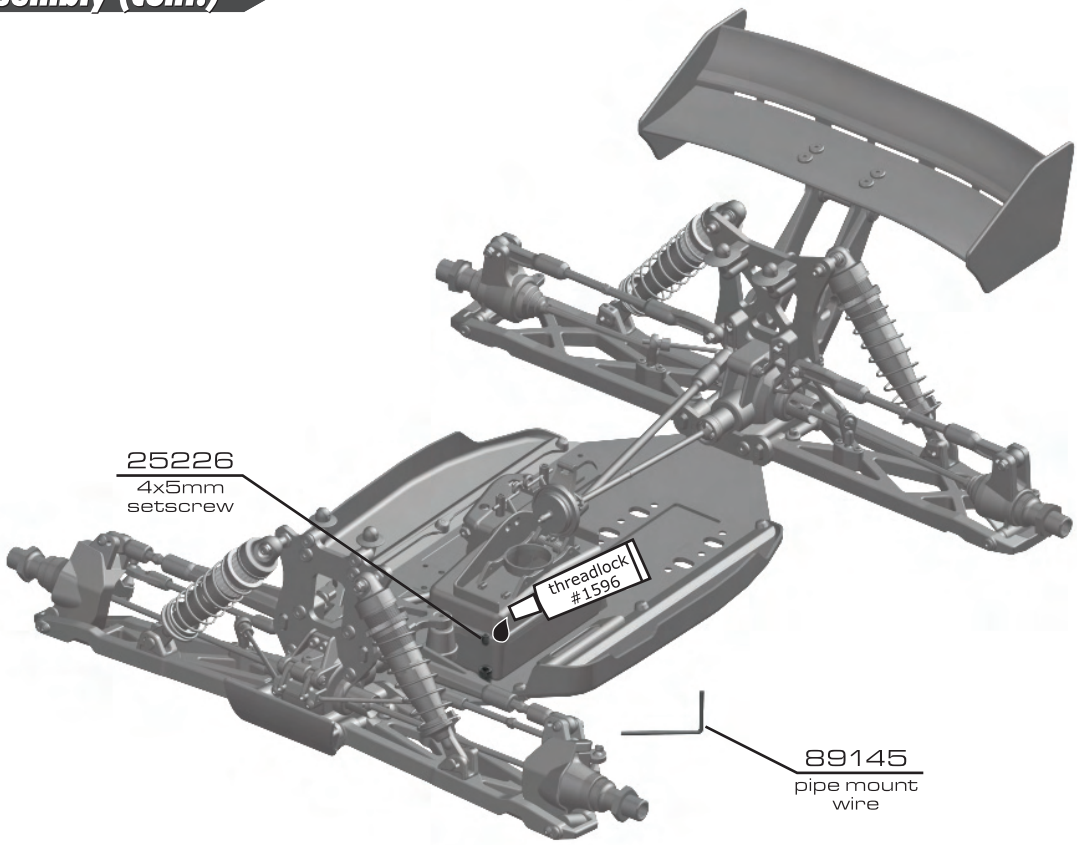

:: Chassis Assembly (cont.)

Bag K6

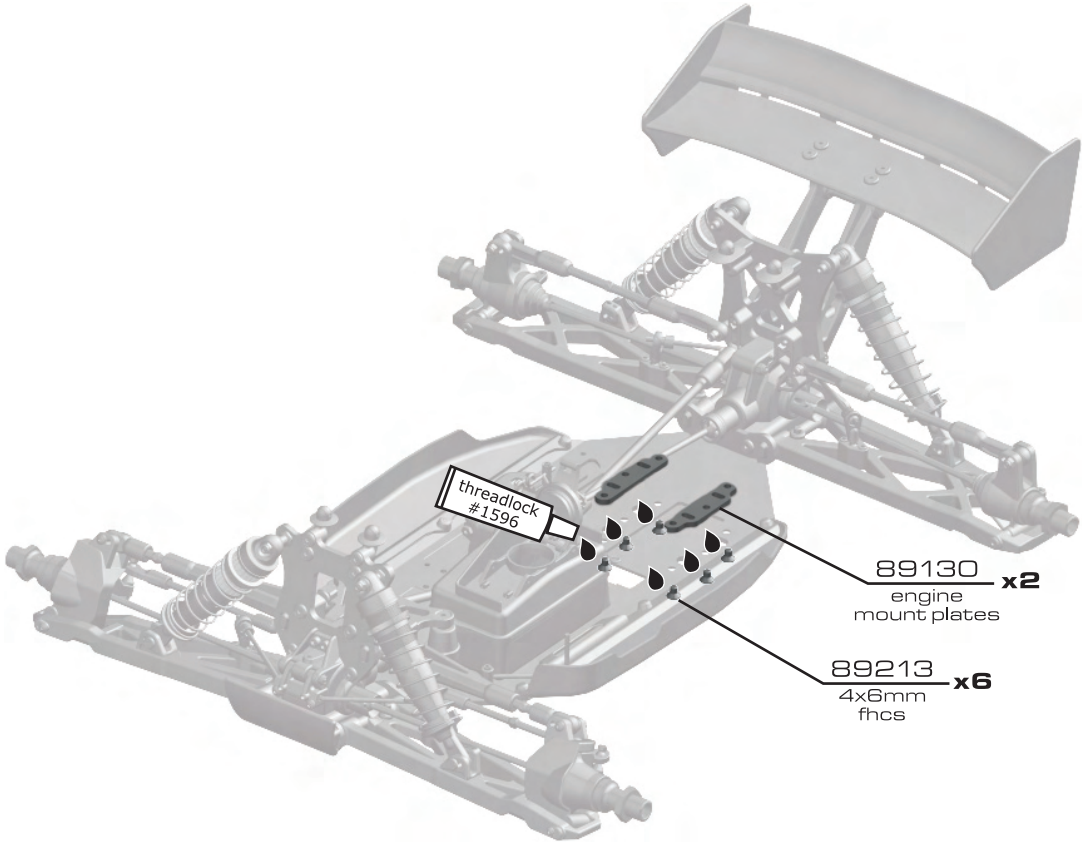

:: Radio Tray

Bag L1

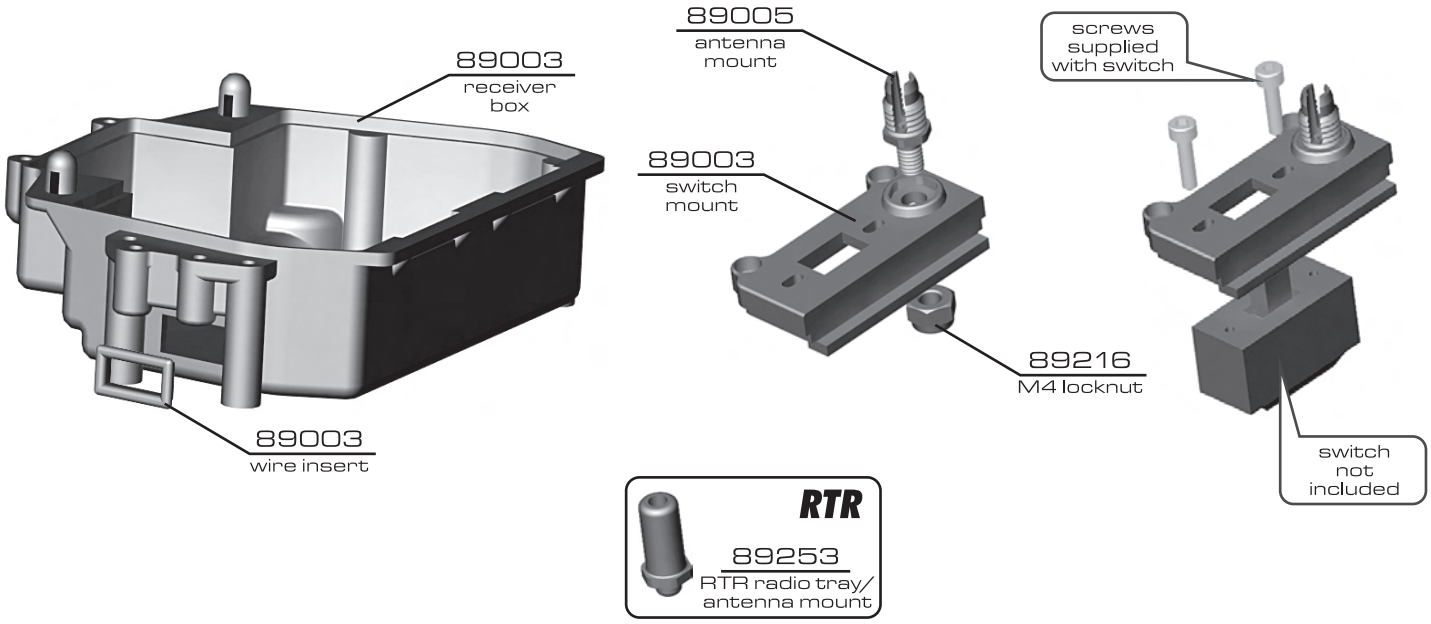

:: Radio Tray (cont.)

Bag L2

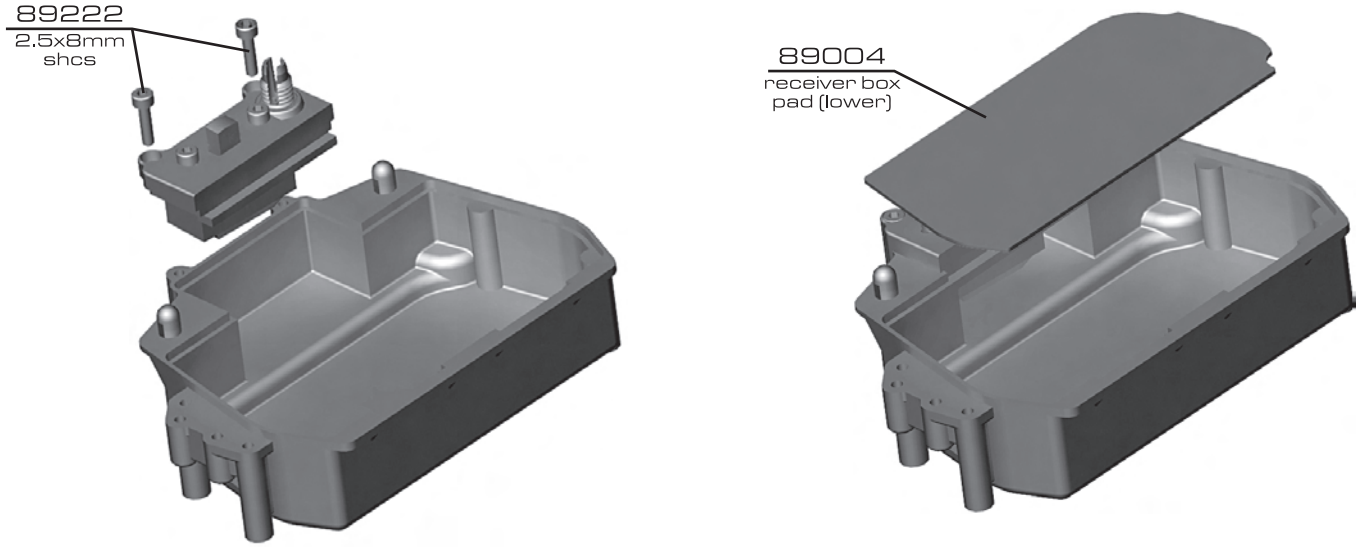

:: Radio Tray (cont.)

Bag L3

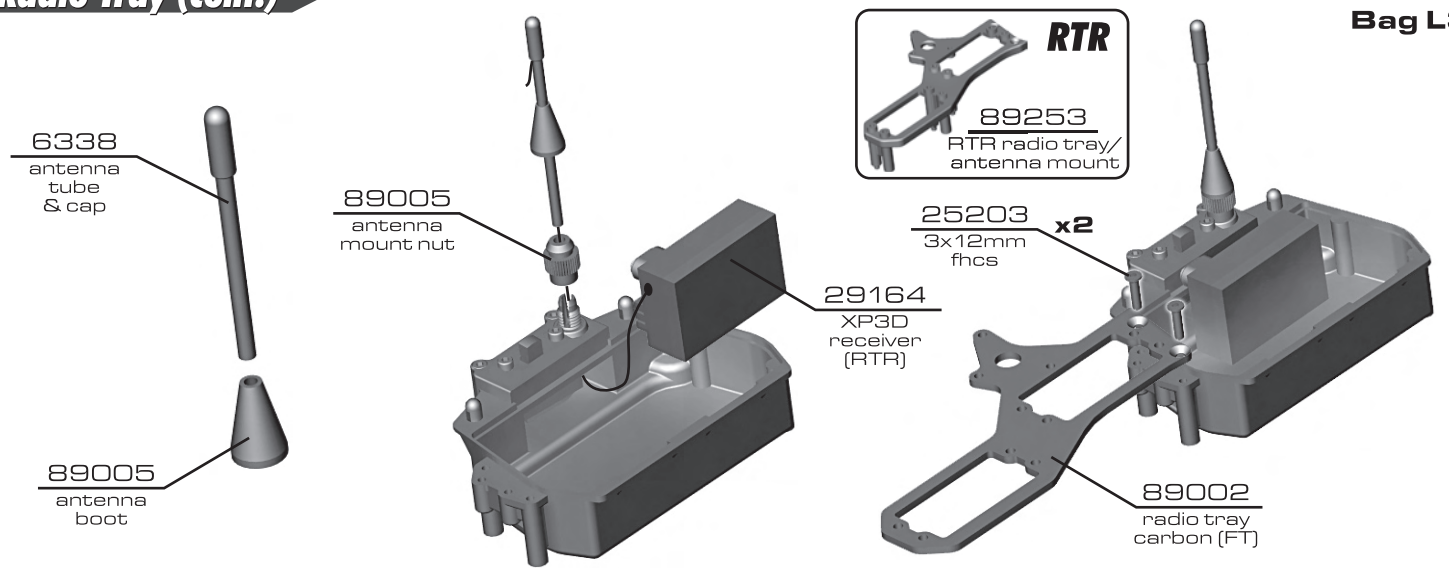

:: Radio Tray (cont.)

Bag L4

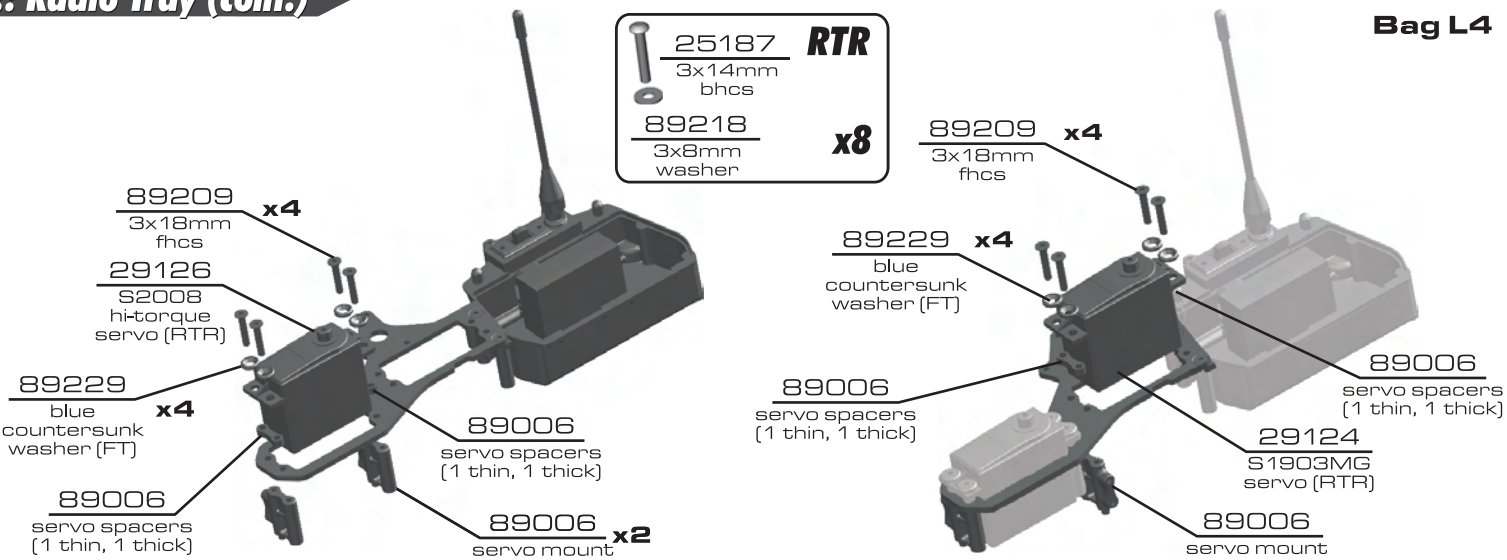

:: Radio Tray (cont.)

Bag L5

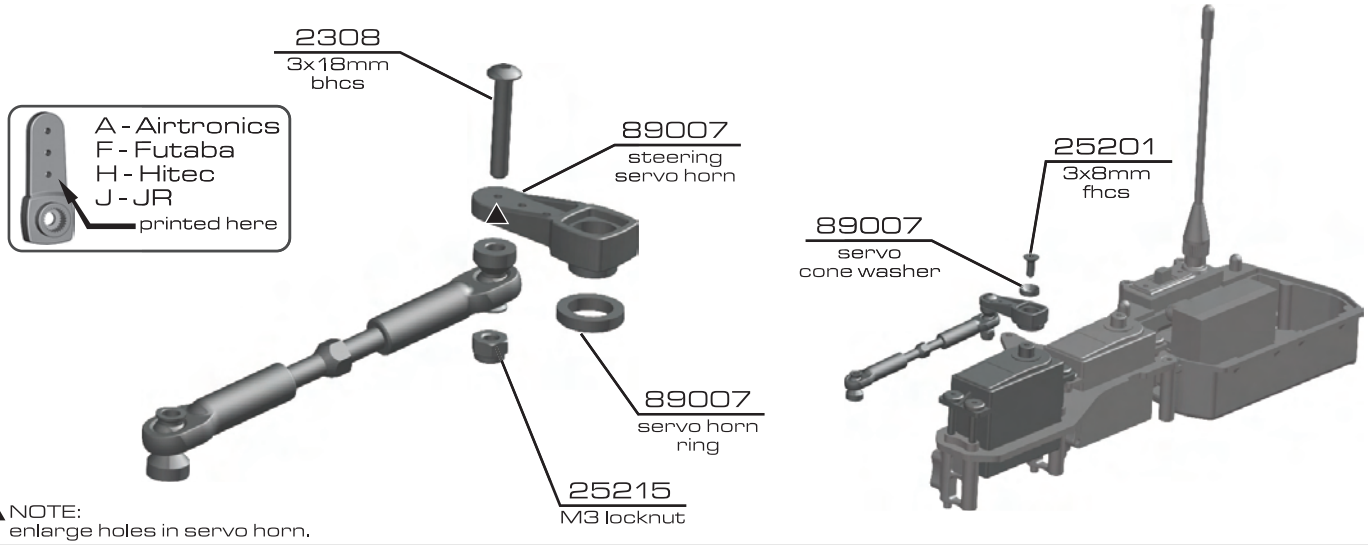

▲ NOTE:
enlarge holes in servo horn.

:: Radio Tray (cont.)

Bag L6

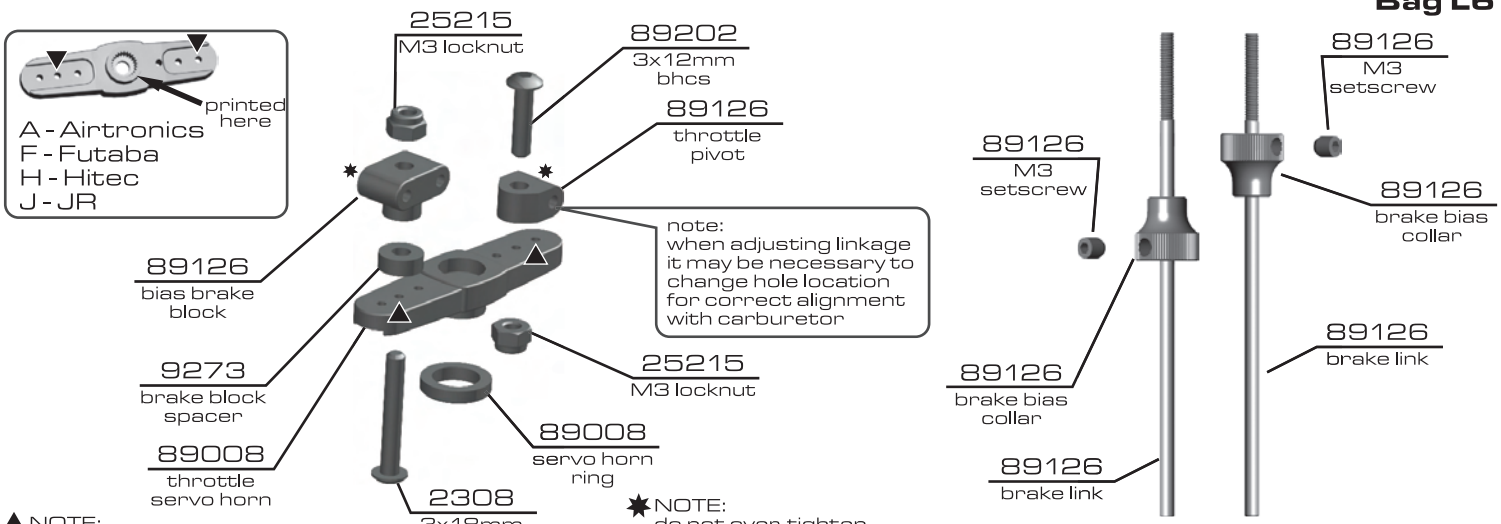

▲ NOTE:
enlarge holes in servo horn.

✸ NOTE:
do not over-tighten,
must pivot freely.

:: Radio Tray (cont.)

Bag L7

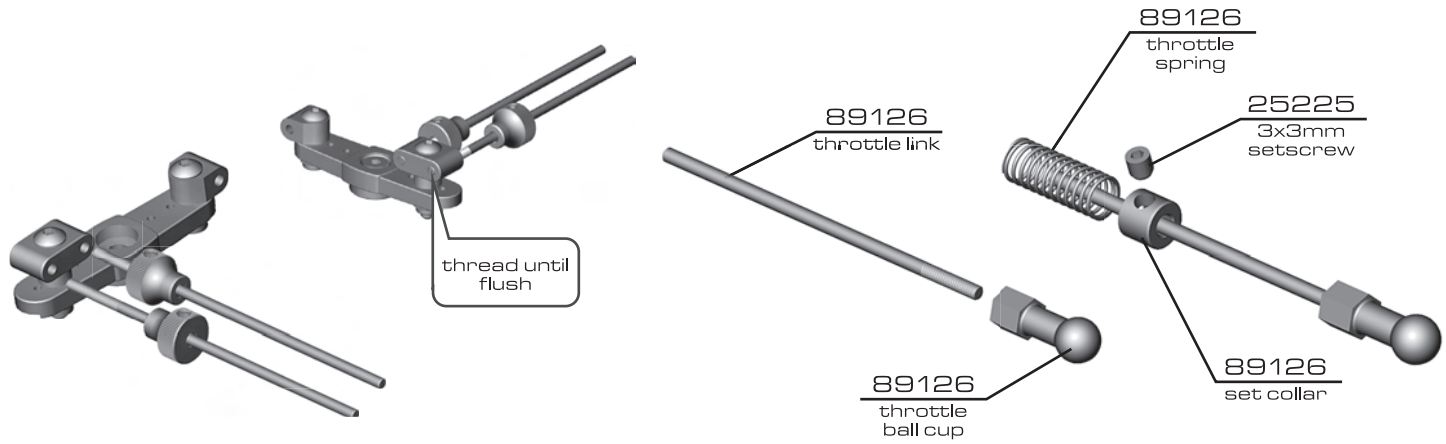

:: Radio Tray (cont.)

Bag L8

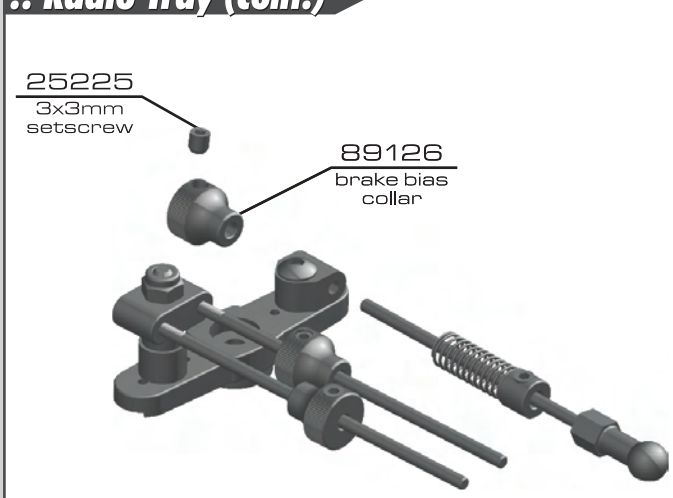

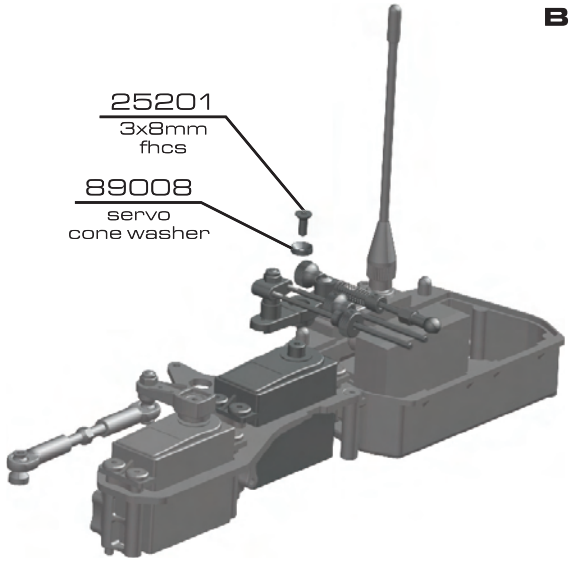

:: Radio Tray (cont.)

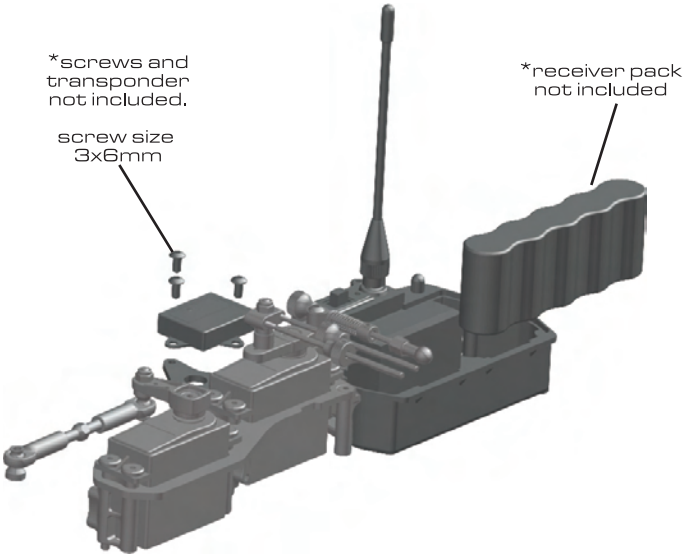

receiver pack configurations

4 cell AA pack | 5 cell inline pack | 5 cell hump pack

:: Radio Tray (cont.)

Bag L9

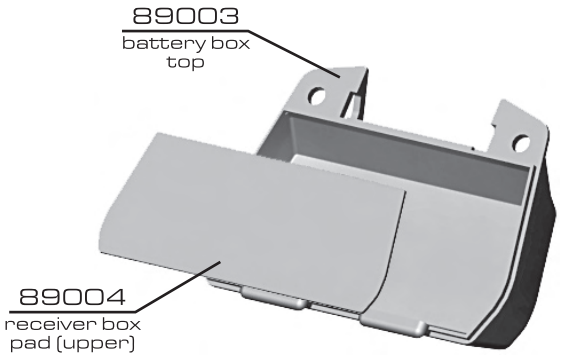

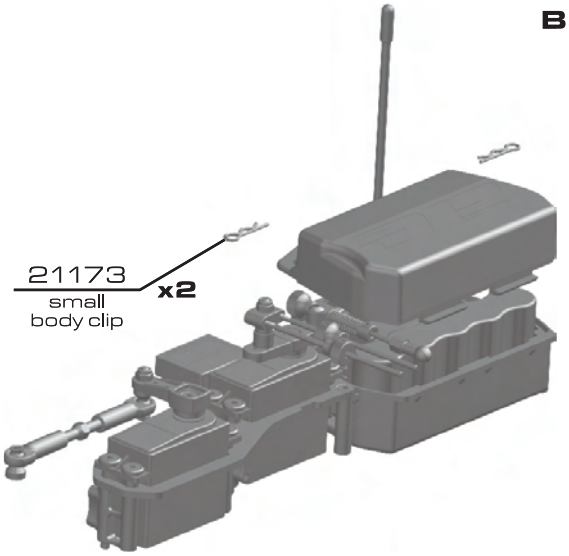

:: Radio Tray Assembly

Bag L10

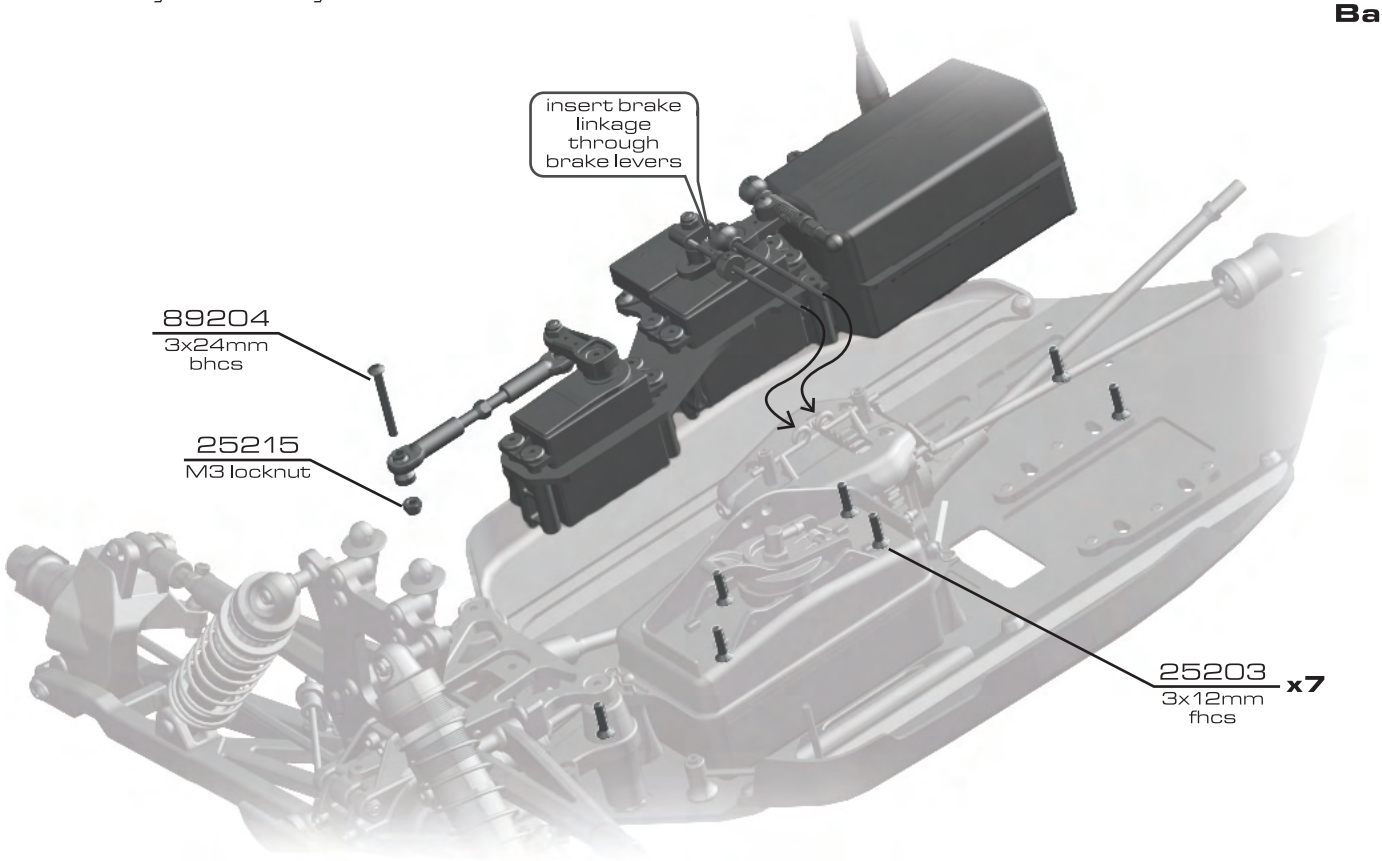

:: Radio Tray Assembly (cont.)

Bag L11

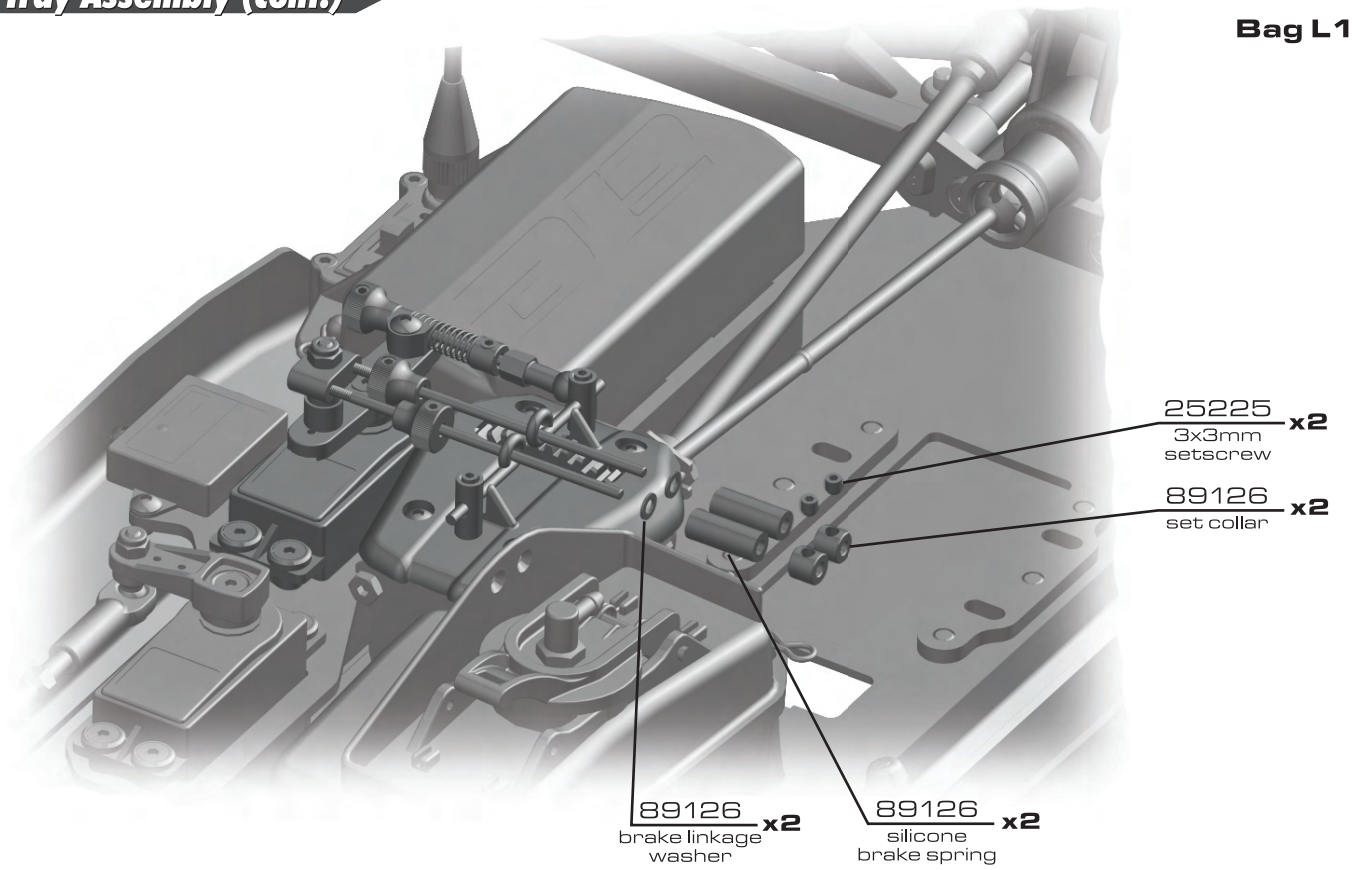

:: Engine

Bag M2

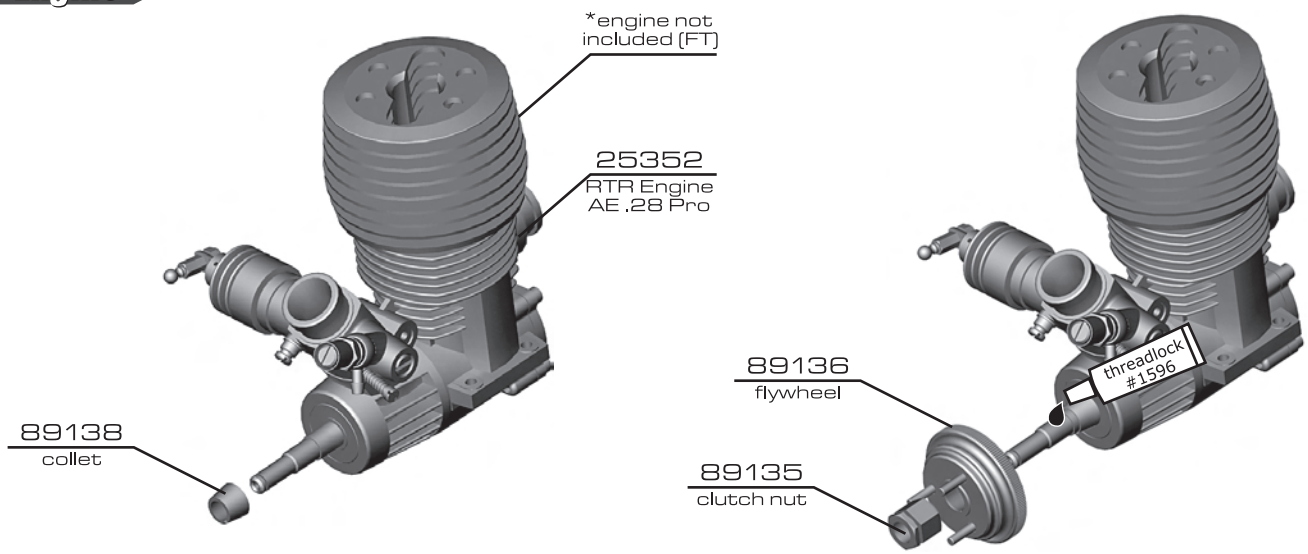

:: Engine (cont.)

Bag M3

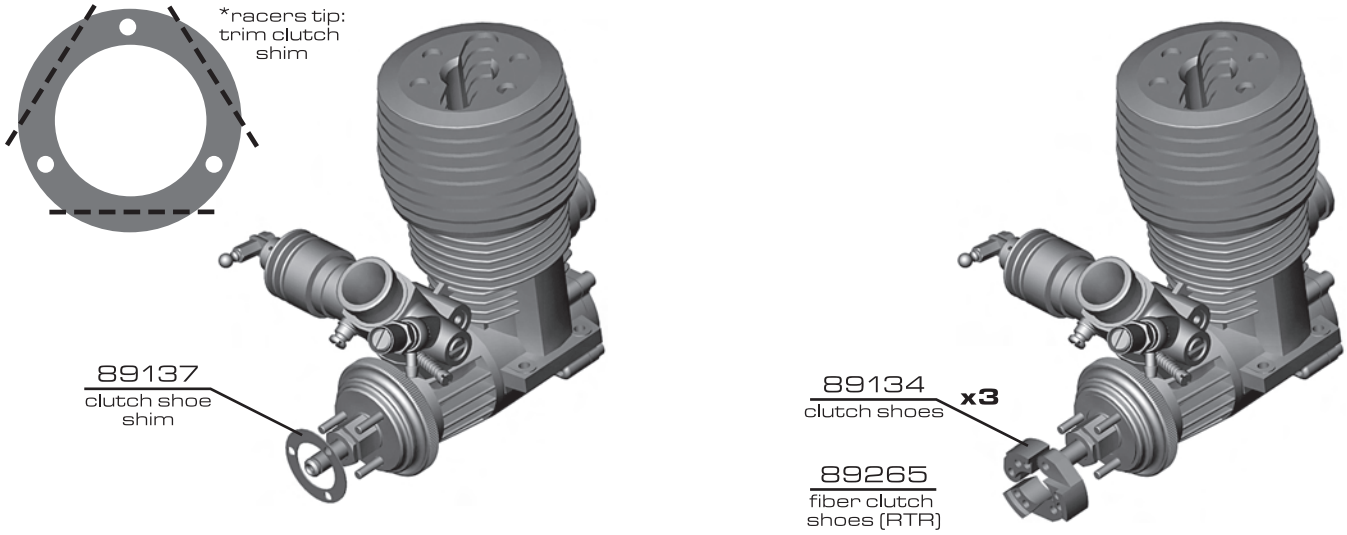

:: Engine (cont.)

Bag M4

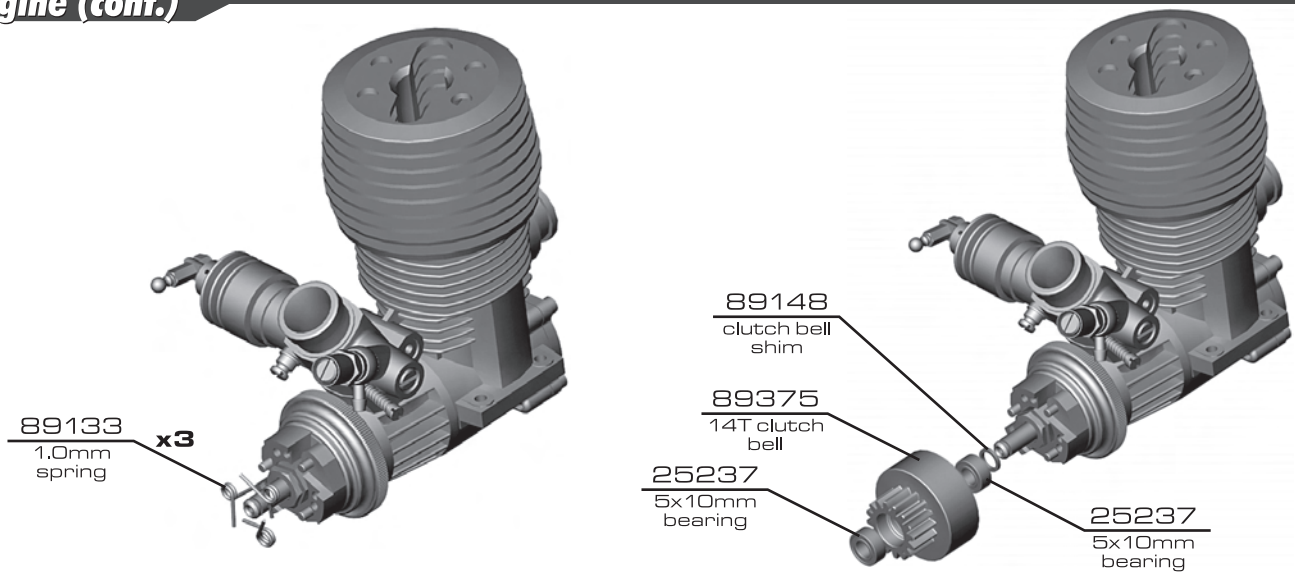

:: Engine (cont.)

Bag M5

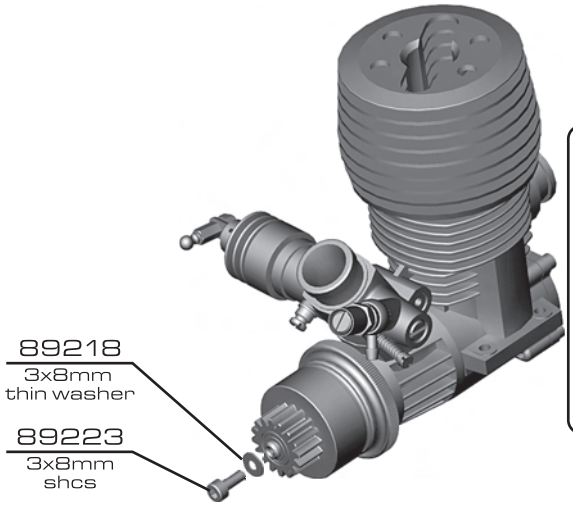

clutch shimming instructions:
if assembly does not spin freely, use 89218 (small clutch shim) on screw to increase end play.

if crankshaft extends past clutch bearing, use 89218 (large clutch shim) to reduce end play

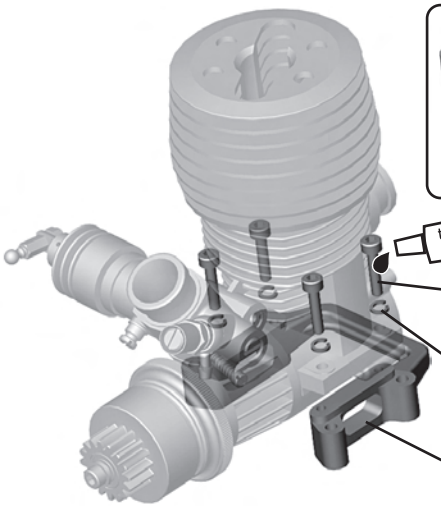

89257
engine
mounts (RTR)
RTR
x2

:: Engine (cont.)

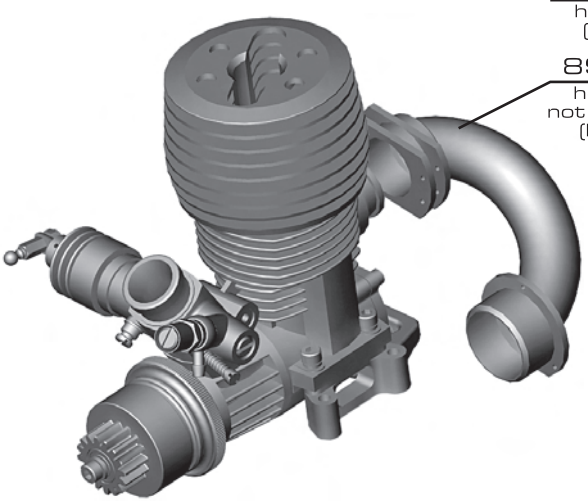

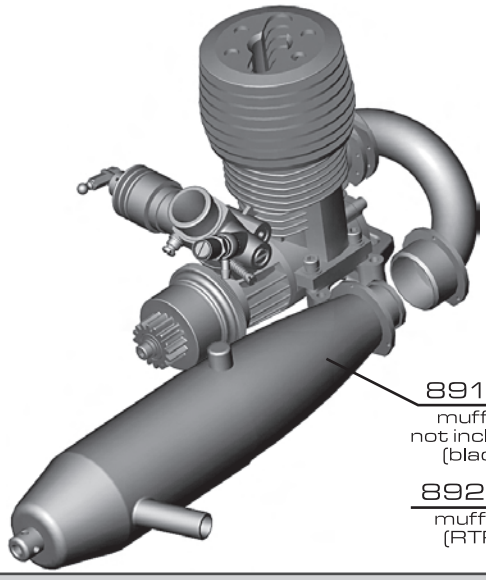

:: Engine Assembly

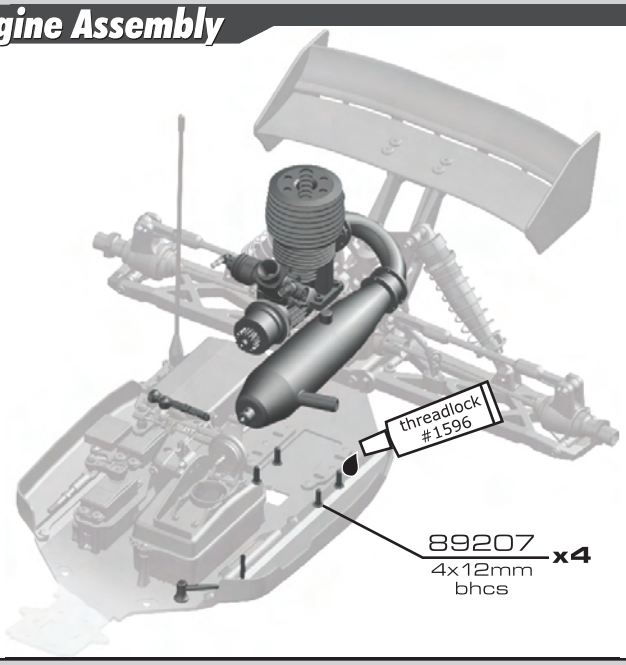

Bag M6

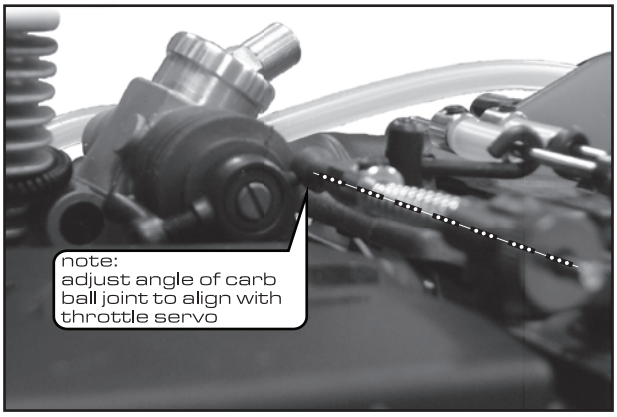

:: Linkage Adjustment

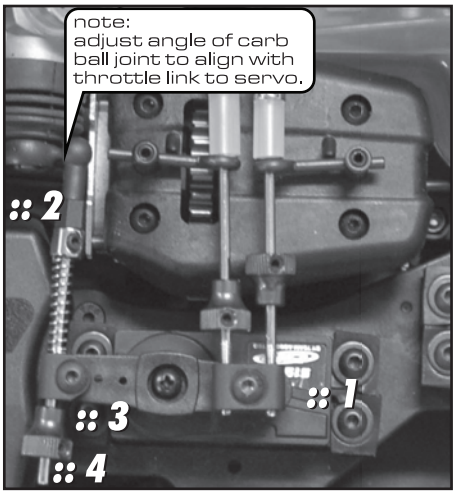

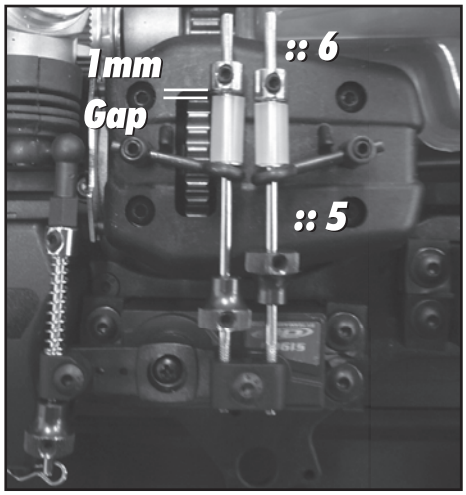

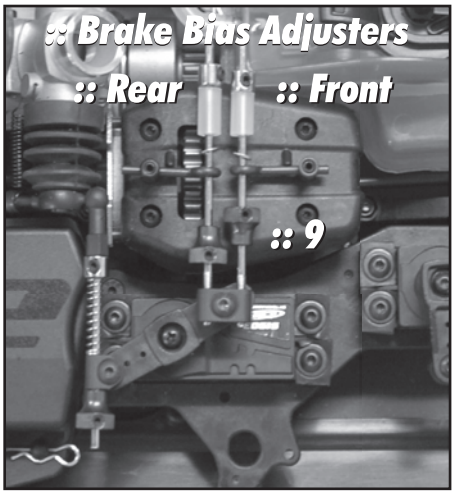

1 : turn on transmitter and car. adjust servo horn until position is parallel with centerline at neutral.

2: set pre-load on spring so that throttle will close.

3: set .05mm gap on throttle collar.

4: trim off excess rod.

5: pull cams to engage brakes. set collar (with brakes engaged) to have 1 mm gap between tubing and collar.
remember: transmitter is still on during this step.

6: trim off excess brake link wire.

7: set throttle EPA max. apply full throttle on transmitter and set EPA so that the carb is full open. be careful not to over-extend the carb.

8: set max brake EPA at 30% as a starting point.

9: brake bias adjusters: thread the adjuster into the mount to achieve stronger brakes on that end of the car.

!DO NOT START ENGINE FOR THIS STEP!

:: Filter Assembly

Bag M7

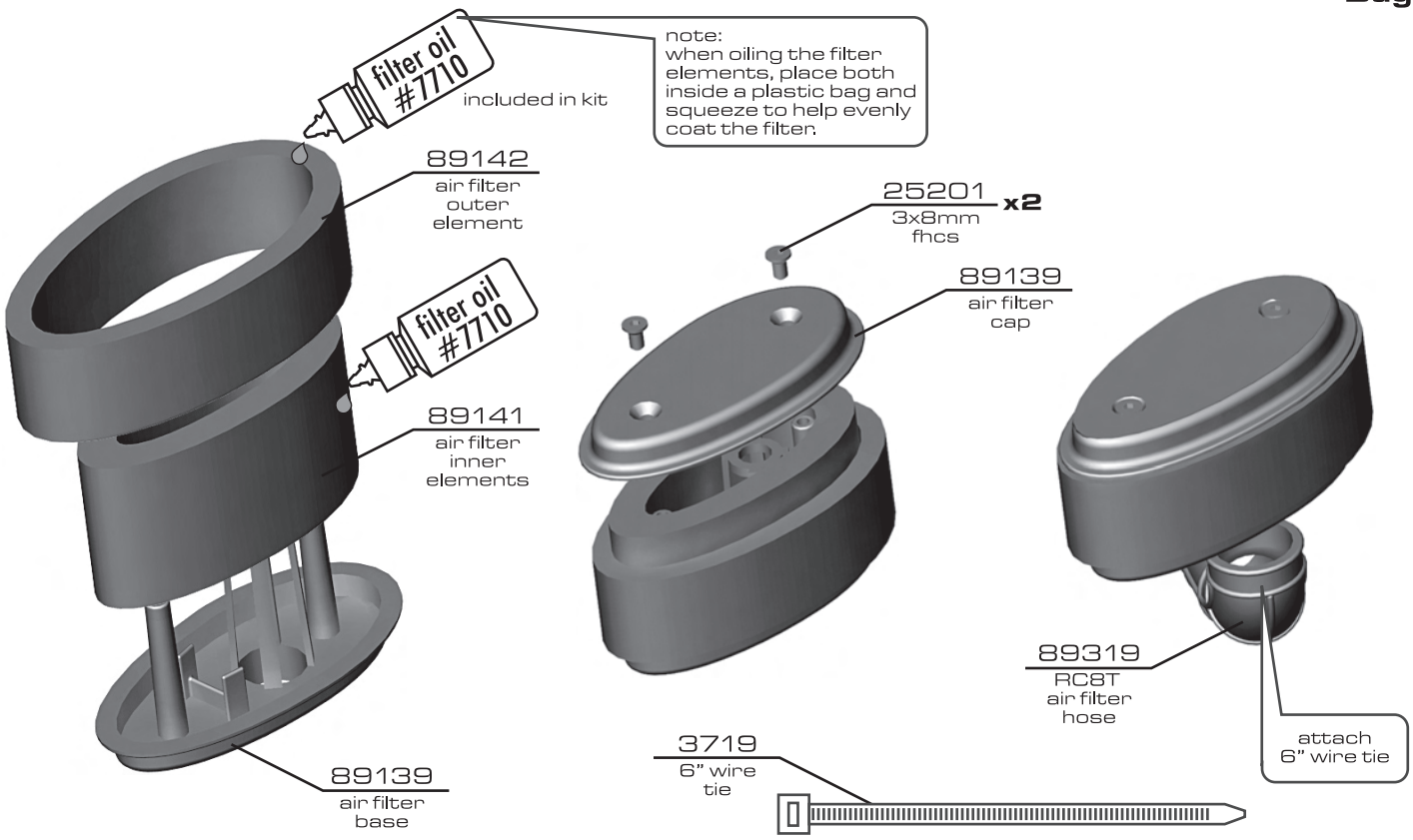

:: Filter Assembly (cont.)

Bag M7

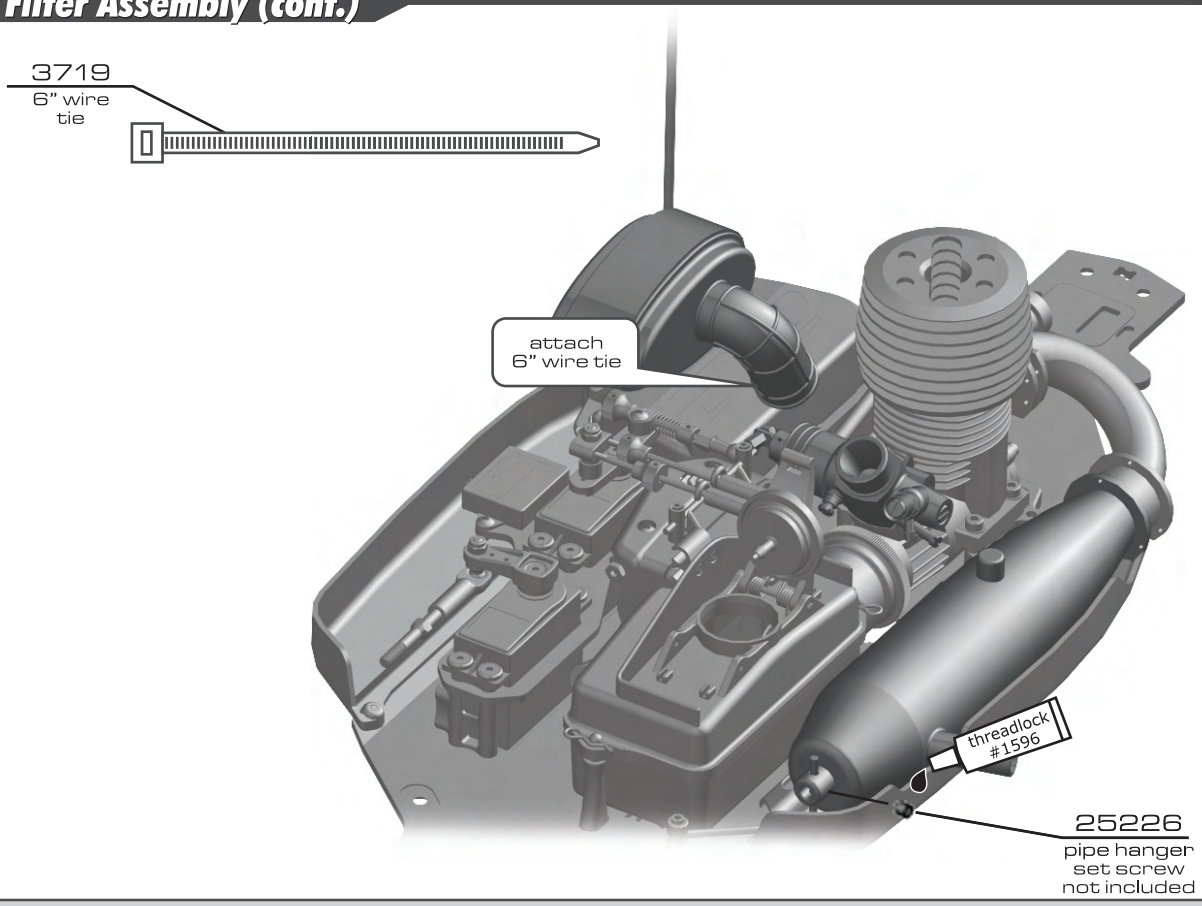

:: Fuel Line

Bag M1

pressure line
from fuel tank lid to exhaust pipe nipple

fuel line
from fuel tank to carburetor

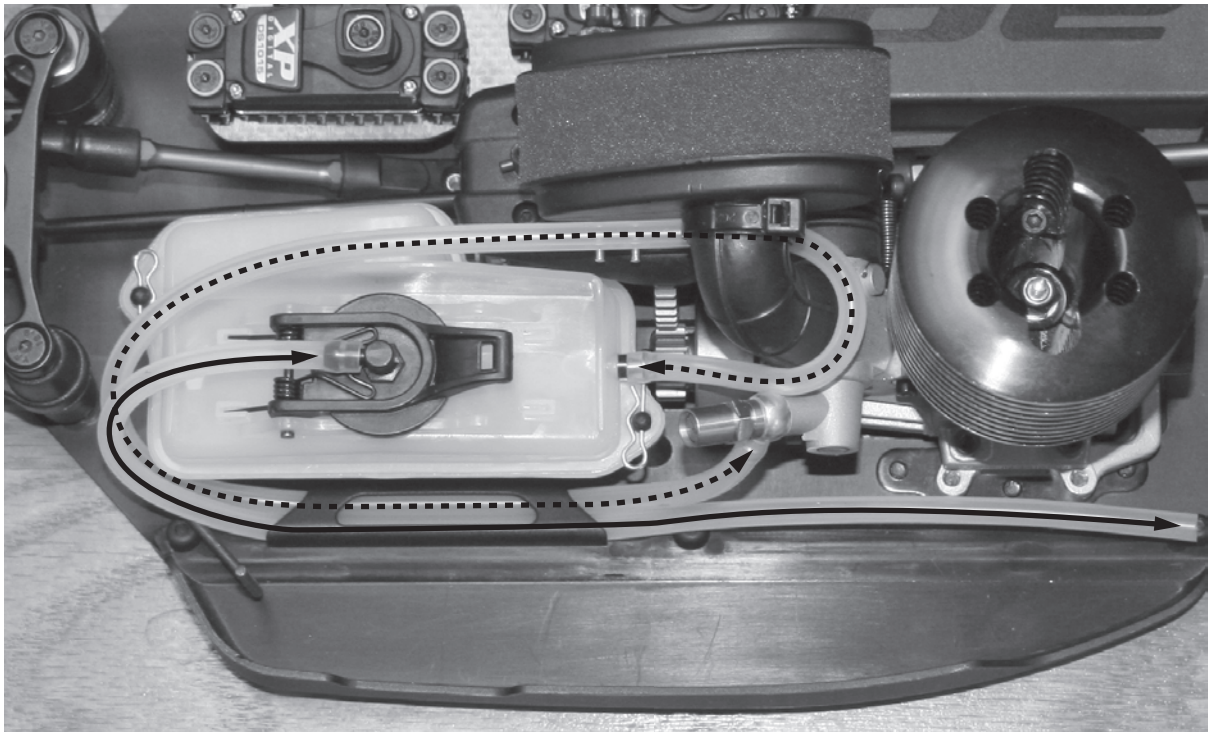

:: Fuel Line (cont.)

Bag M1

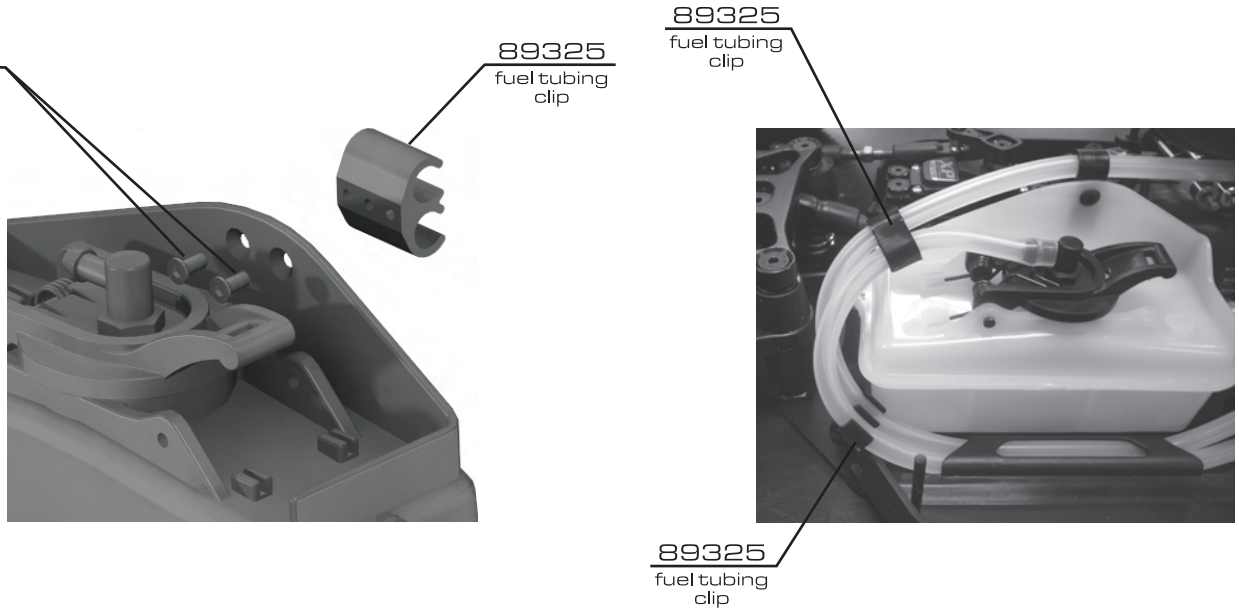

:: Tire Assembly

Bag N1/N2

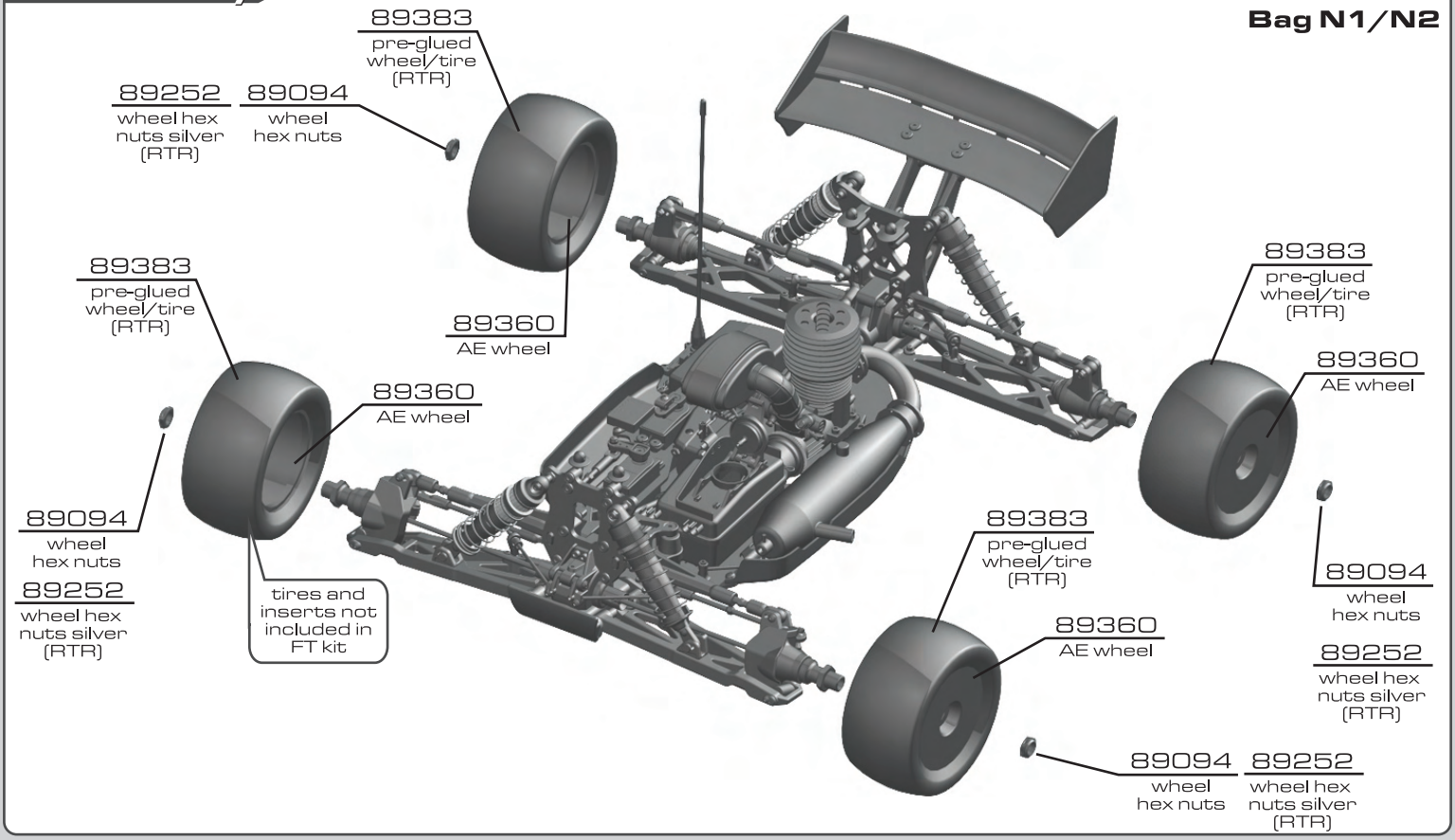

:: Body Assembly

Bag N1/BOX

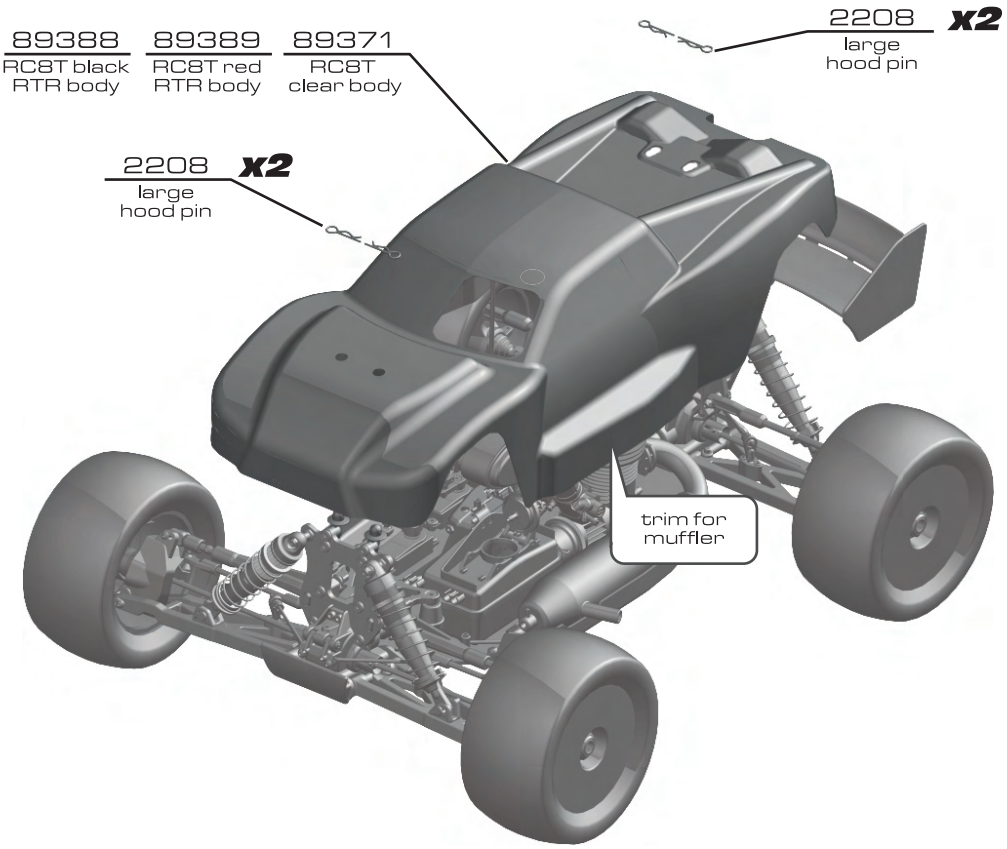

:: Building Tips

Tires:
The tires need to be glued to the wheels using any fast-curing FT Tire glue (CA) (AE Pt# 1597). This is available at your local hobby shop. Make sure to clean the mounting surface of the tire with alchohol for best adhesion

Gear Mesh:
To correctly set your gear mesh, follow the steps below:
1. Loosen engine mount screws so you can slide your engine and mount.
2. Slide engine and mount until the clutchbell gear comes in contact with the spur gear. Tighten engine mount screws. Hold the spur gear in place and 'rock' the clutchbell gear. There should be a little 'free-play' between the gears.
3. If you have a small amount of 'free-play', continue building your RC8T. If not, go back to Step 1.

Receiver Pack:
Your RC8T does not come with a receiver pack. It is recommended that you use a 5-cell 1000mah pack (minimum) in either stick (AE Pt #613) or hump (AE Pt#612) pack configuration (your RC8T will accept either). Charge your pack per the battery manufacturer's instructions. This will need to be done before you can setup up your RC8T. (RC8T RTR requires 4AA batteries for the included battery holder, or they can be replaced with #612 or #613 rechargeable receiver packs).

Engine Tuning:
Follow the manufacturers instructions to correctly tune your engine. You will need to adjust the fuel mixture according to altitude, weather, etc.

Clear Body (Factory Team only):
Your RC8T comes with a clear lexan body. You will need to prep the body before you can paint it. Wash the inside thoroughly with warm water and liquid detergent. Dry using a clean, soft, lint-free cloth. Use the supplied window masks to cover the windows from the **INSIDE** (RC cars get painted from the inside). Using high quality tape, apply to create a design to the inside of the body. Spray (either can or airbrush) the paint to the inside of the body **(NOTE: use ONLY paint that is recommended for use with lexan (polycarbonate) plastics. If you don't, you will destroy the plastic body!!!!)**.
After painting, cut the body along the trim lines. Make sure to cut holes for the engine head, body mounts, antenna, fuel tank lid, top end adjustment needle and muffler outlet. Remove the clear protective sheet before applying decals.

:: Tuning

Gearing:
Recommended Gearing: 14-54 This is a good starting point for most tracks.

When using a .28 size engine, the Team will typically change the spur gear to a 50 tooth. Other optional gearing for .21 on a smaller track will be 13-52 or 13-54.

Differential Fluid:
Team Associated includes a complete bottle of 7,000cst diff oil. You can also provide your own oil and try one of the optional setups.

Standard differential fluid setup: Front = 7,000cst; Center = 7,000cst; Rear = 7,000cst.
Optional diff setup 1 (bumpy outdoor track):
Front = 7,000cst; Cener = 10,000cst; Rear = 3,000cst.
Optional diff setup 2 (high grip track):
Front = 10,000cst; Center = 15,000cst; Rear = 3,000cst.

Front Differential:
Use the standard setup for most cases. Try 10,000cst to 15,000cst to get less low speed steering and better acceleration out of turns.

Center Differential:
Use the standard setup for most cases. Many racers will try thicker oil (10,000 or 15,000cst) for harder acceleration out of turns.

Rear Differential: Start with the standard setup. For expert drivers, the most popular setting for truggy is 3,000 cst. the thicker 7,000cst kit oil will rotate less in the turns and accelerate straight on power. The thinner oil (2,000 or 3,000cst) will give more low speed traction.

Caster:
The supplied caster block inserts are 16 degrees. Standard kickup is 9 degrees (2 dot - up insert). You can reduce caster to 14 degrees for smoother steering (also adjust upper caster spacing with both shims in front of the ball joint) and up to 18 degrees for more steering (also adjust upper caster spacing with both shims behind the ball joint).

Front Upper Pivot Insert:
The standard insert is 2 dot - down. Going up (2 up, 3 up - 1 mm each) will give more turn in, but less steering on exit. going down (2 down, 3 down) will reduce turn in, but give more steering on exit.

Front Caster Block Location:
The standard long location will work the best for most tracks. going to the short front link will give you less steering, but can make the car more predictable in bumps and exiting turns.

Steering Rack Location:
The standard middle location will work the best for most tracks. Going to the back hole will give the car more aggressive steering, especially off-power at low speed. Going to the front hole will give more steering, especially noticeable on power through faster sweeping turns.

Front Camber:
A good starting camber setting is —2 degrees. Positive camber, where the top of the tire is leaning out, is typically not recommended.

Front Toe-In:
Zero degree toe-in (tires pointing straight forward) is a good starting setting. You can increase turn in by adding 1-2 degrees of toe-out (front of tires point slightly out). Front toe - in is not a typical tuning adjustment used by the Team.

:: Tuning (cont.)

Front Ride Height:
The front ride height setting you should use most often is with 37mm of gap between the chassis bottom and the ground. Check the ride height with the FT Ride Height Gauge (#1449) by lifting up the entire car about 8-12 inches off the bench and drop it. After the suspension "settles" into place, then raise or lower the adjustment collars as necessary.

Front Arm Hole Shockmount:
Inside on the arm will give a more responsive front end. Outside on the arm will be less responsive steering, but will be more predictable through bumps.

Anti-squat:
Anti-squat denotes the angle of the rear arms relative to the ground. The kit setting is 2 degrees, and you can also run 1 degree by changing to 3 DOWN insert in front of the rear gearbox. Run the 1 dot insert to get 3 degrees of anti-squat. Less antisquat lets the suspension work more over the bumps, but it will sacrifice the ability to square up on power.

Rear Camber Link Length & Vertical Adjustment:
On the RC8T you can change the length of the camber link on the hub, or adjust the inboard location on the tower. The longer link will give the feeling of the most grip, but it will not be as responsive to square up on throttle, and might get loose if the truggy is driven hard. This can easily be corrected by running the shorter link on the hub, but it will sacrifice some forward grip.

Changing to a higher location on the tower will be a smaller adjustment than changing the length of the upper link. Going up on the tower location has a similar effect as the longer link, but not as drastic. For example, if you change to the short rear link on the hub and you need to gain more forward grip, try raising the link up on the tower.

Rear Hub Hinge Pin Height:
The kit setting of the upper hole gives more rear grip on turn in, and good forward traction, but it might have difficulty squaring up out of turns. Changing to the lower hinge pin hole in the hub is one of the best adjustments to make to the rear end, more responsive on throttle, and to give more side grip in the turns.

Rear Hub Spacing:
You have 3 options for rear hub spacing, FWD, MIDDLE, & BACK. The kit setting provides a good balance of rear traction and steering, and will be used most often. Moving the hubs FWD will give more rear traction for low grip tracks. You can use the hubs BACK on high grip tracks. Also, you can replace the included shims to get intermediate settings.

Rear Camber:
A good starting camber setting is –2 degrees. Use the included #1719 camber gauge to set your camber. Adding a small amount of positive camber, where the top of the tire is leaning out, will tend to improve straight-line acceleration on loose tracks.

Rear Ride Height:
The rear ride height setting you should use most often is with 42mm of gap between the chassis bottom and ground. Check the ride height with the FT Ride Height Gauge (#1449) by lifting up the entire truck about 8-12 inches off the bench and drop it. After the suspension "settles" into place, then raise or lower the adjustment collars as necessary.

Rear Arm Hole Shockmount:
Inside on the arm will give less entry steering, accelerates better straightline through bumps, but may lack side bite. Outside on the arm will be less grip, more steering, but will be more predictable when it breaks traction.

:: Tuning (cont.)

Droop Settings:

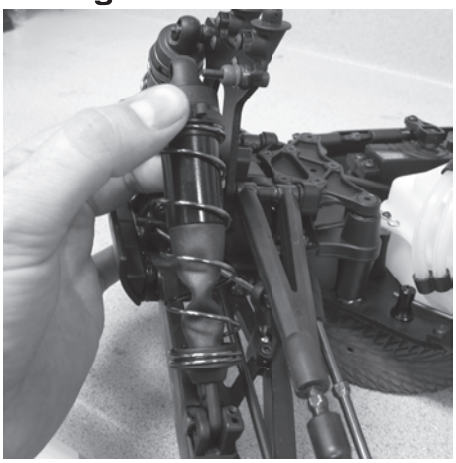

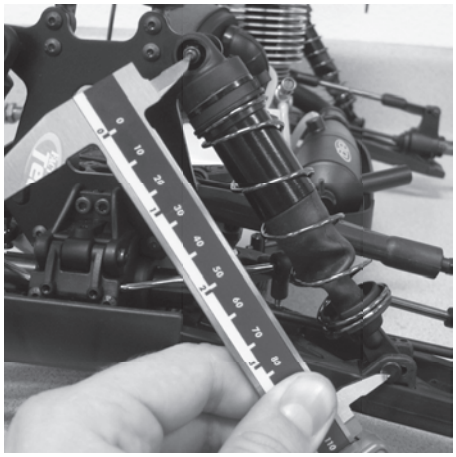

Step 1 : With only the bottom of the shocks attatched, the droop screws tightened all the way, and the chassis above your working surface so the arms are at full extension, you should be able to easily slide the top of your shock over the standoff screw, while leaving the shock at full extension. If the mounting hole of the shock cap is above or below the standoff screw, adjust the droop screw accordingly. Repeat for all corners of your vehicle. Measure from the center of the standoff screw to the center of the shock riser button to get your FULL DROOP setting.The front shocks should be 115mm, while the rear shocks should be 126mm.

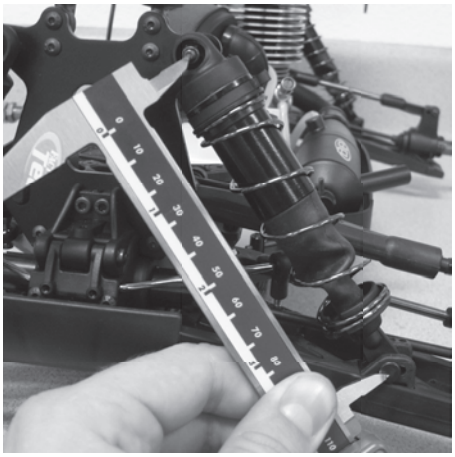

Step 2: Finish installing the shock to the standoff. Set your vehicle to your desired droop setting. To increase your droop turn the droop screw (from the top) counter-clockwise (loosen), turn the droop screw (from the top) clockwise (tighten) to decrease your droop. Remember, never back the screw out beyond full droop or you could risk damage to your vehicle.

Step 4: Measure from the center of the shock standoff screw to the center of the shock riser button to get your final droop setting. The front shocks should both be set at the same lenght, as should the rear shocks. * The normal droop setting is between 0-5mm from the FULL DROOP measurement.

Front Droop: Increasing front droop (loosen droop screws) will increase off-throttle steering. It also allows the front end to lift more, giving more rear grip and less front grip on-power. Remember to never loosen the screws beyond the FULL DROOP setting. Decreasing front droop (tighten droop screws) yields more on-power steering and quicker response at the expense of some stability in bumpy sections. It will also give less off-throttle steering.

Rear Droop: Increasing rear droop (loosen droop screws) will increase traction in bumpy sections, but will reduce high-speed stability. Remember to never loosen the screws beyond the FULL DROOP setting. Decreasing rear droop (tighten droop screws) will increase stability in high speed sections, but will reduce stability in bumpy sections.

Setup Sheets:

Most often, the best way to get your car handling right is to go to our web site www.rc10.com and click on the Support link, then the Setup Sheets link, then RC8T setups. Our team of professional drivers help develop these setups at National events. Also, most drivers have a “base” setup that they use as a starting point for every event. Try running some of our base setups OR look for track conditions and tires that are similar to your local track and mimic that setup. Remember, each adjustment has a purpose, so copy everything from the setup sheet and then make adjustments based on the recommendations in here and in our online tuning guide at http://www.rc10.com/rc/tuning.

RC8T

Setup Sheet for Team Associated's RC8T

:: Driver: Team Associated **:: Date:** _____
:: Track: Standard RC8T Setup
:: Event: _____

Rev. 1

:: Front Suspension

anti-roll bar:
- ☐ 2.2 - black
- ■ 2.5 - silver
- ☐ 2.8 - gold

steering rack:
- back
- mid
- front

hinge pin bushing
#: 2
☐ up ■ down

camber: -2 °

caster: 16 °

toe: 0 °

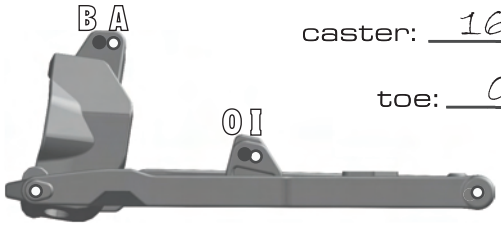

kickup bushing
#: 2
■ up ☐ down

ride height: 37mm

:: Rear Suspension

anti-roll bar:
- ☐ 2.2 - black
- ☐ 2.5 - silver
- ■ 2.8 - gold

wheelbase:
- ☐ long
- ■ medium
- ☐ short

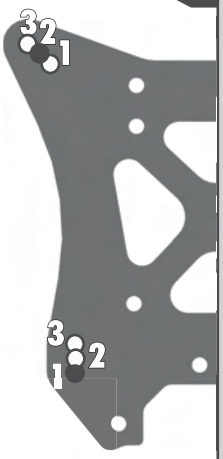

camber: -2 °

toe: 3 °

hub:
- upper
- lower

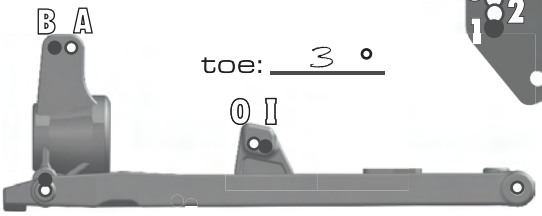

anti-squat bushing
#: 2
☐ up ■ down

ride height: 43mm

:: Front Shocks

spring: (5.1 lb) silver piston: 1.3
shock fluid: 50 wt. length: 113mm
shock cap: _____

:: Rear Shocks

spring: (3.3 lb) silver piston: 1.3
shock fluid: 50 wt. length: 125mm
shock cap: _____

:: Differentials

front fluid: 7000cst
center fluid: 7000cst
rear fluid: 7000cst

:: Wing

location: ☐ forward ■ back
angle: ■ low ☐ med. ☐ high
type: _____

:: Chassis Braces

■ standard ☐ molded ☐ aluminum
other: _____

:: Engine

engine: 30% recommended restrictor: _____
muffler: _____ temp: _____
glow plug: _____
fuel: _____

:: Gearing/Clutch

gearing: 14/54
shoes: 3 x aluminum ____ x fiber
spring: ____ x.9mm 3 x1.0mm ____ x1.1 mm
notes: _____

:: Notes

_____

:: Tires

tire (F/R): _____ / _____
compound (F/R): _____ / _____
insert: _____ wheel: _____

:: Race and Vehicle Comments

qualify: _____ main: _____ finish: _____ tq: ☐
comments: _____

:: Track Info

traction: ☐ high ☐ med. ☐ low
surface: ☐ smooth ☐ bumpy
☐ blue groove ☐ soft dirt ☐ grass
☐ clay ☐ wet ☐ dusty
other: _____

:: For more setups, visit www.RC10.com and click on 'Setup Sheets'

:: Hardware - 1:1

cap head (shcs)

- 2.5x8mm (89222)
- 3x8mm (89223)
- 3x10mm (25620)
- 3x16mm (89224)
- 3x20mm (25192)
- 3x24mm (89225)
- 3x26mm (89226)
- 3x40mm (89228
- 3x45mm (89279)

flat head (fhcs)

- 3x8mm (25201)
- 3x10mm (25202)
- 3x12mm (25203)
- 3x14mm (89208)
- 3x18mm (89209)
- 3x20mm (89210)
- 3x26mm (89211)
- 3x30mm (89212)
- 4x6mm (89213)
- 4x12mm (89214)
- 4x14mm (89217)

button head (bhcs)

- 2.5x3mm (89201)
- 2.5x6mm (31520)
- 3x6mm (31531)
- 3x10mm (25211)
- 3x12mm (89202)
- 3x14mm (25187)
- 3x16mm (89203)
- 3x18mm (2308)
- 3x20mm (25188)
- 3x24mm (89204)
- 3x26mm (89205)
- 4x10mm (89206)
- 4x12mm (89207)

setscrews

- 3x3mm (25225)
- 3x5mm (89219)
- 4x5mm (25226)
- 4x12mm (89220)
- 5x4mm (89221)

nuts (lock/plain)

- m3 locknut (25215)
- flanged m3 locknut (25612)
- m4 locknut (89216)

ball bearings

- steering bearing (89161)
- 5x10mm (25237)
- 6x10mm (31404)
- 8x16mm (25236)
- 15x21mm (89162)

shims & washers

- 3x8mm thin washer (89218)
- clutch bell shims (89148)
- diff washer (89120)
- diff shim (89117)
- Blue countersunk washer (89229)
- Silver cone washer (89230)

notes

RC8T

Setup Sheet for Team Associated's RC8T

:: Driver: _____ :: Date: _____

:: Track: _____

:: Event: _____

Rev. 1

:: Front Suspension

anti-roll bar:
- ☐ 2.2 - black
- ☐ 2.5 - silver
- ☐ 2.8 - gold

hinge pin bushing
#_____
☐ up ☐ down

steering rack:

back
mid
front

camber: _____

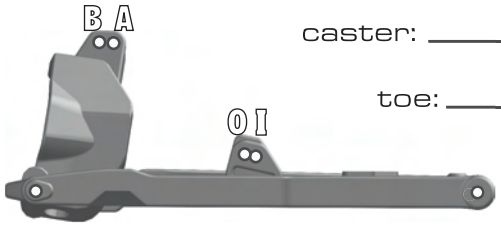

caster: _____

toe: _____

kickup bushing
#_____
☐ up ☐ down

ride height: _____

:: Rear Suspension

anti-roll bar:
- ☐ 2.2 - black
- ☐ 2.5 - silver
- ☐ 2.8 - gold

wheelbase:
- ☐ long
- ☐ medium
- ☐ short

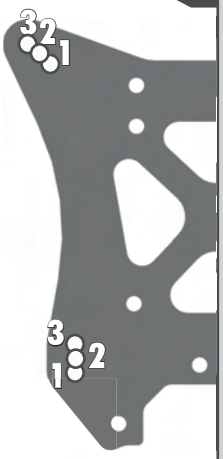

camber: _____

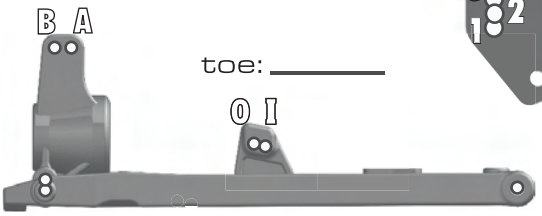

toe: _____

hub:
upper
lower

anti-squat bushing
#_____
☐ up ☐ down

ride height: _____

:: Front Shocks

spring: _____ piston: _____
shock fluid: _____ length: _____
shock cap: _____ _____

:: Rear Shocks

spring: _____ piston: _____
shock fluid: _____ length: _____
shock cap: _____ _____

:: Differentials

front fluid: _____
center fluid: _____
rear fluid: _____

:: Wing

location: ☐ forward ☐ back
angle: ☐ low ☐ med. ☐ high
type: _____

:: Chassis Braces

☐ standard ☐ molded ☐ aluminum
other: _____

:: Engine

engine: _____ restrictor: _____
muffler: _____ temp: _____
glow plug: _____
fuel: _____

:: Gearing/Clutch

gearing: _____
shoes: _____x aluminum _____x fiber
spring: ____x.9mm ____x1.0mm ____x1.1mm
notes: _____

:: Notes

_____
_____
_____

:: Tires

tire (F/R): _____/_____
compound (F/R): _____/_____
insert: _____ wheel: _____

:: Race and Vehicle Comments

qualify: _____ main: _____ finish: _____ tq: ☐
comments: _____
_____
_____
_____
_____

:: Track Info

traction: ☐ high ☐ med. ☐ low
surface: ☐ smooth ☐ bumpy
☐ blue groove ☐ soft dirt ☐ grass
☐ clay ☐ wet ☐ dusty
other: _____
_____

:: For more setups, visit www.RC10.com and click on 'Setup Sheets'

Associated Electrics, Inc.
26021 Commercentre Dr.
Lake Forest, CA 92630 USA
http://www.TeamAssociated.com
http://www.RC10.com